MVMP 240/2



Multiple-row metal grilles with angled louvers, multiple-row

- Casing material: Coated steel

	Unit of measurement	MVMP 240/2

Dimensions

L	H	l	h	A
240	240	226	226	0.8

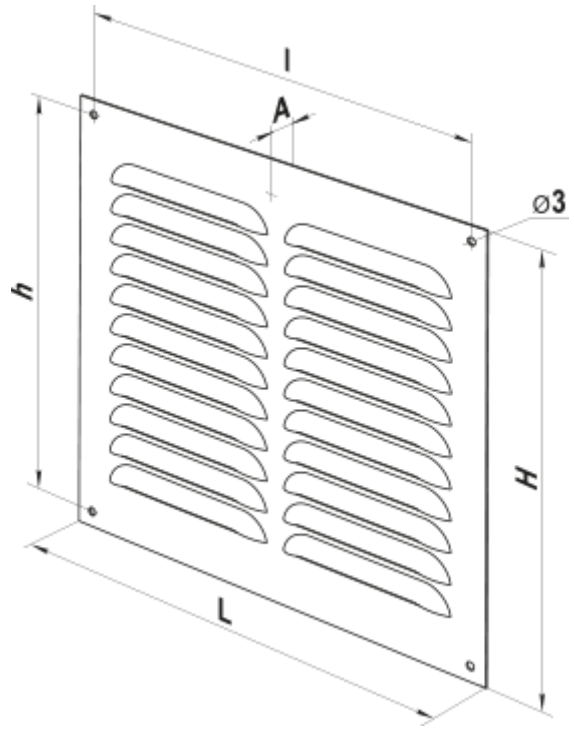
l
A
⌀3
h
H
L