# MVMP 200x300/2



Multiple-row metal grilles with angled louvers, multiple-row

• Casing material: Coated steel

| | Unit of measurement | MVMP 200x300/2 |
|---|---|---|

## Dimensions

| L | H | l | h | A |
|---|---|---|---|---|
| 200 | 300 | 186 | 286 | 0.8 |

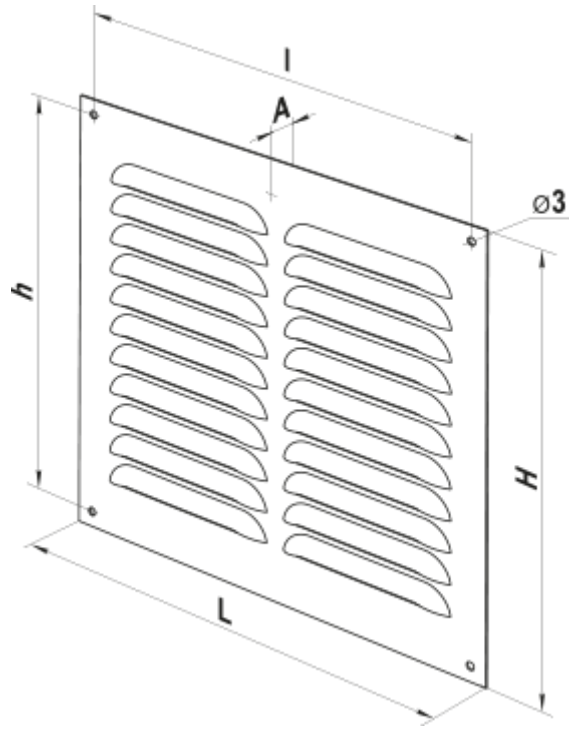
l
A
⌀3
h
H
L