MVMP 195/2



Multiple-row metal grilles with angled louvers, multiple-row

• Casing material: Coated steel

	Unit of measurement	MVMP 195/2

Dimensions

L	H	l	h	A
195	195	181	181	0.8

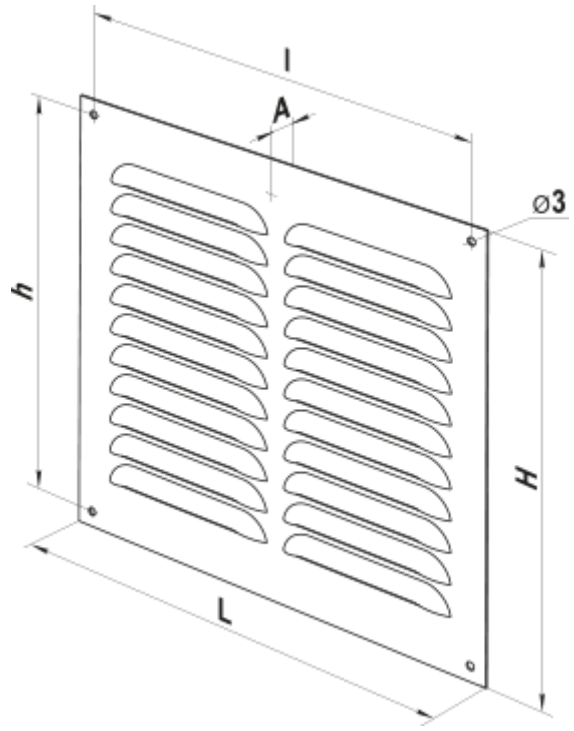
l
A
⌀3
h
H
L