MVM-50 S A



Supply and exhaust metal grille

• Casing material: Aluminium

	Unit of measurement	MVM-50 S A

Dimensions

D	D1	a
50	41	5

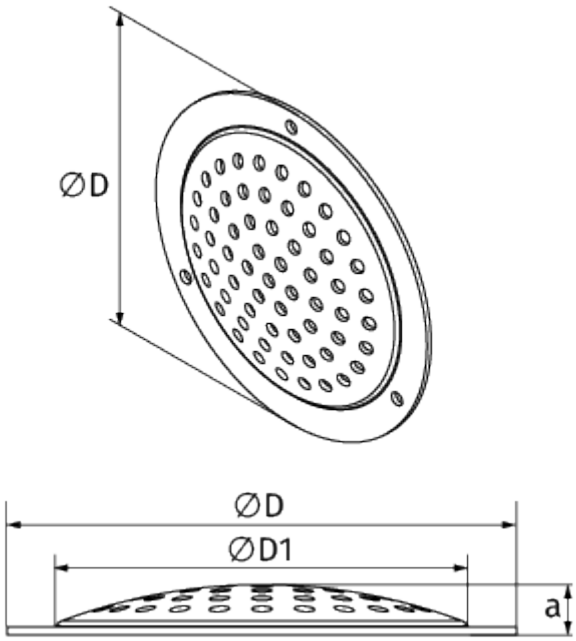
ØD
ØD
ØD1
a