MVM 475x80/10-3s Zn

Single-row metal grilles with straight louvers, for door installation

- Casing material: Galvanized steel
- Options for grilles: Insect screen

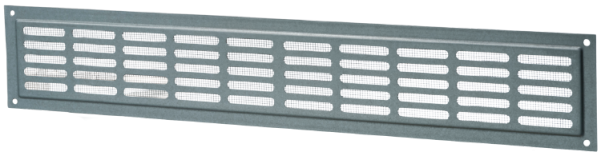

	Unit of measurement	MVM 475x80/10-3s Zn

Dimensions

L	H	l	h	A
475	80	461	71	11.5

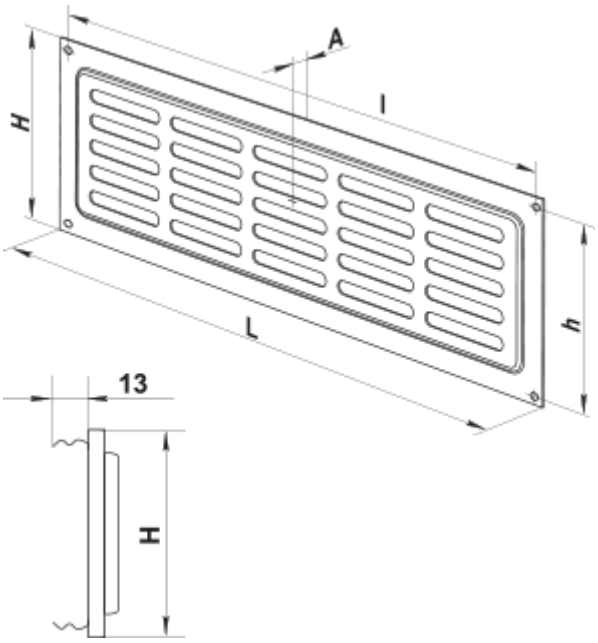
A
l
H
h
L
13
H