MVM 162 bVs N

Supply and exhaust metal hoods

• Casing material: Stainless steel



	Unit of measurement	MVM 162 bVs N
Connected air duct size	mm	160
Free air	m²	0.0135

Dimensions

ØD	ØD1	L
155	192	62

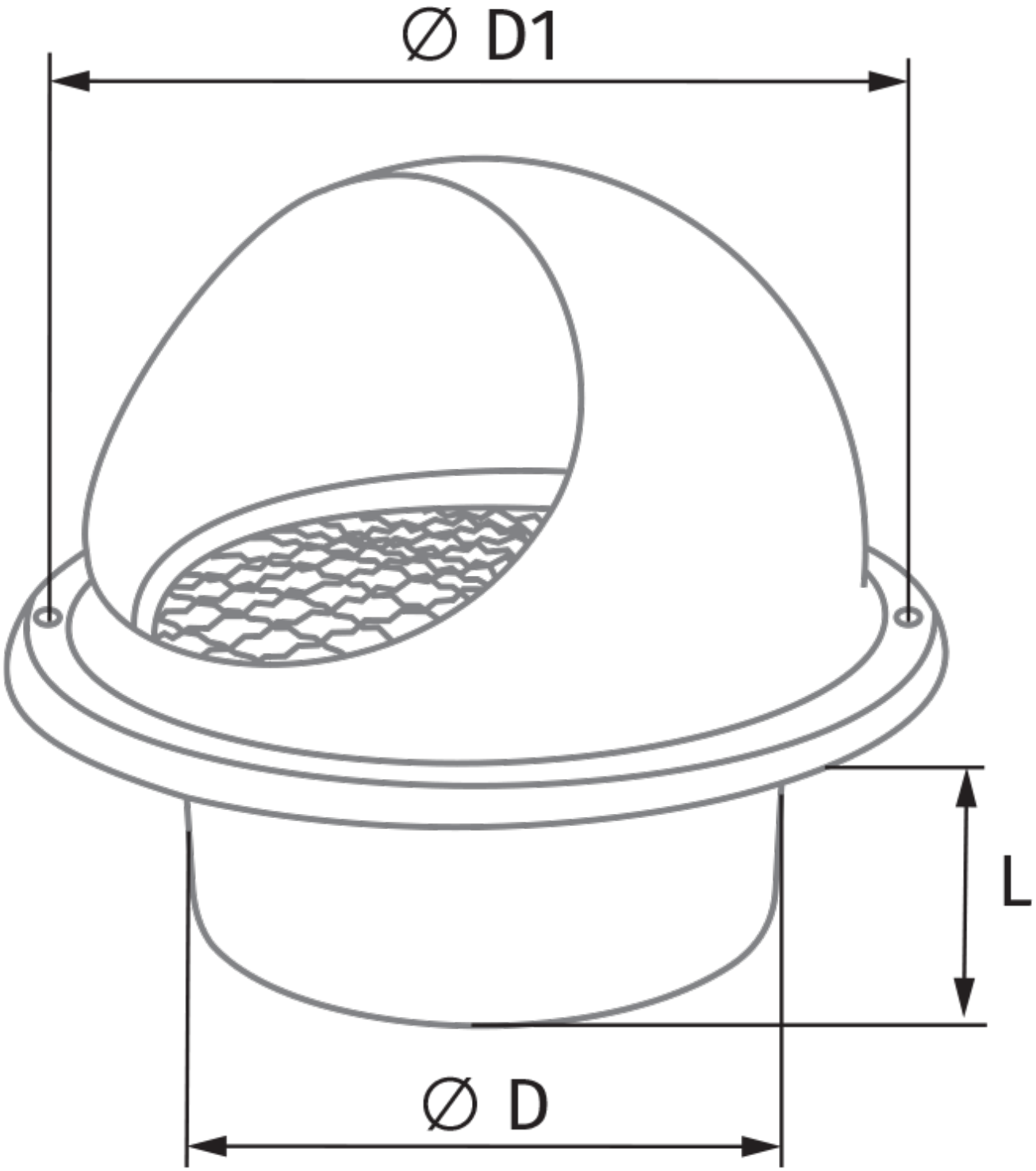
Ø D1
L
Ø D