MVM 152 bVs N

Supply and exhaust metal hoods

• Casing material: Stainless steel



	Unit of measurement	MVM 152 bVs N
Connected air duct size	mm	150
Free air	m²	0.0126

Dimensions

ØD	ØD1	L
145	192	62

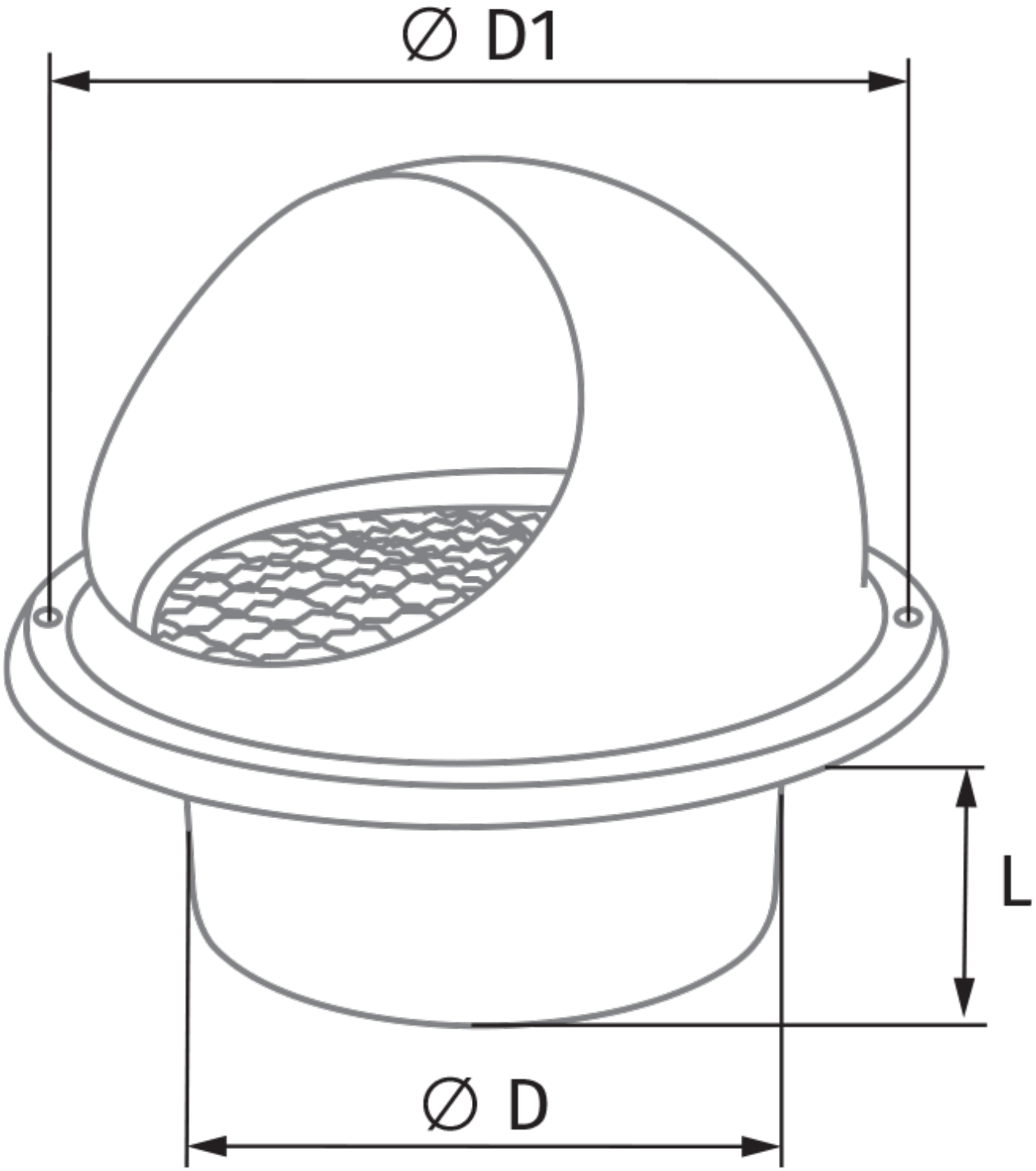
Ø D1
L
Ø D