MVM 122 bVs N

Supply and exhaust metal hoods

• Casing material: Stainless steel



	Unit of measurement	MVM 122 bVs N
Connected air duct size	mm	125
Free air	m²	0.0082

Dimensions

ØD	ØD1	L
120	165	52

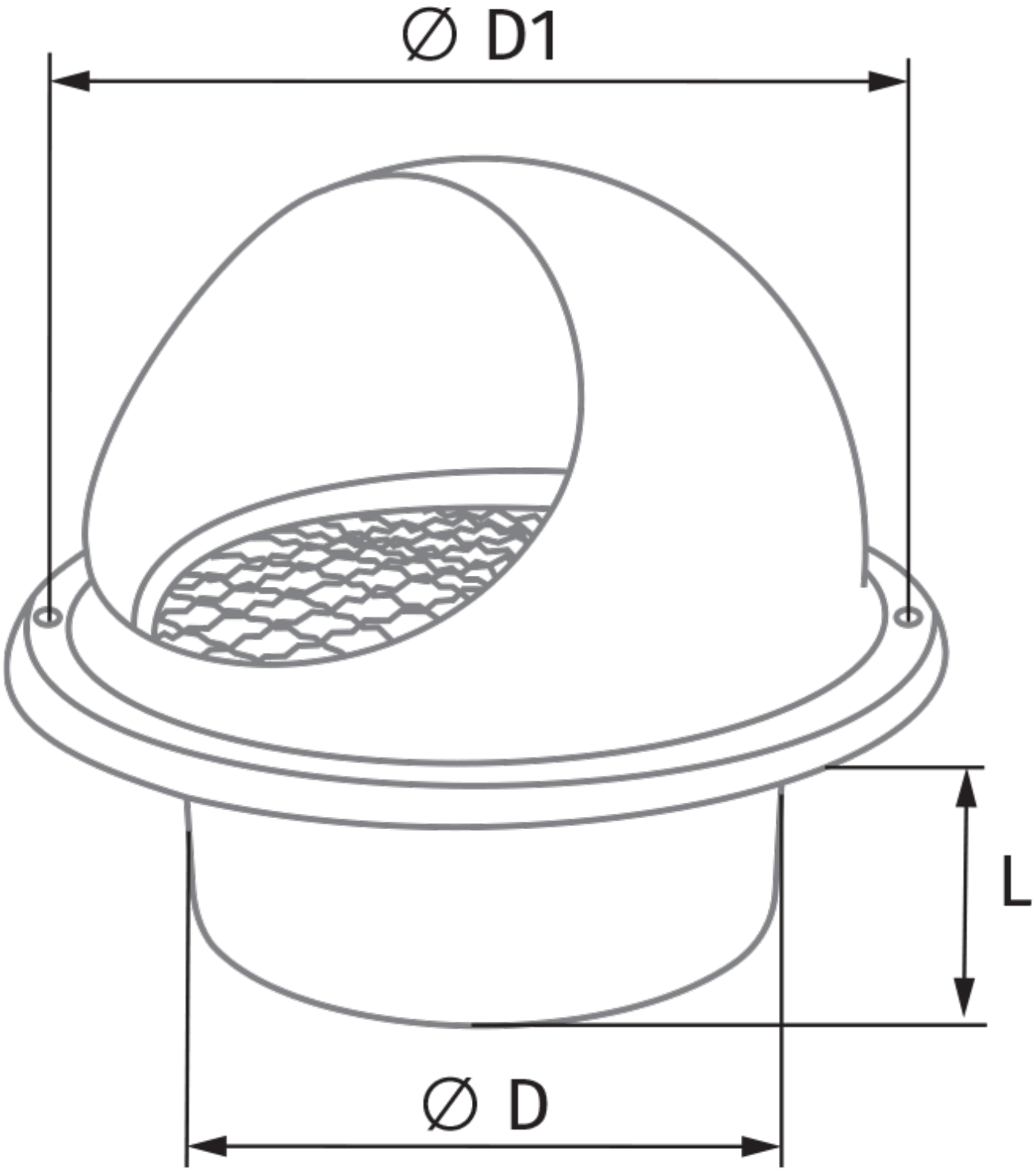
Ø D1
L
Ø D