MVM 102 bVs N

Supply and exhaust metal hoods

• Casing material: Stainless steel



	Unit of measurement	MVM 102 bVs N
Connected air duct size	mm	100
Free air	m²	0.0048

Dimensions

ØD	ØD1	L
97	133	52

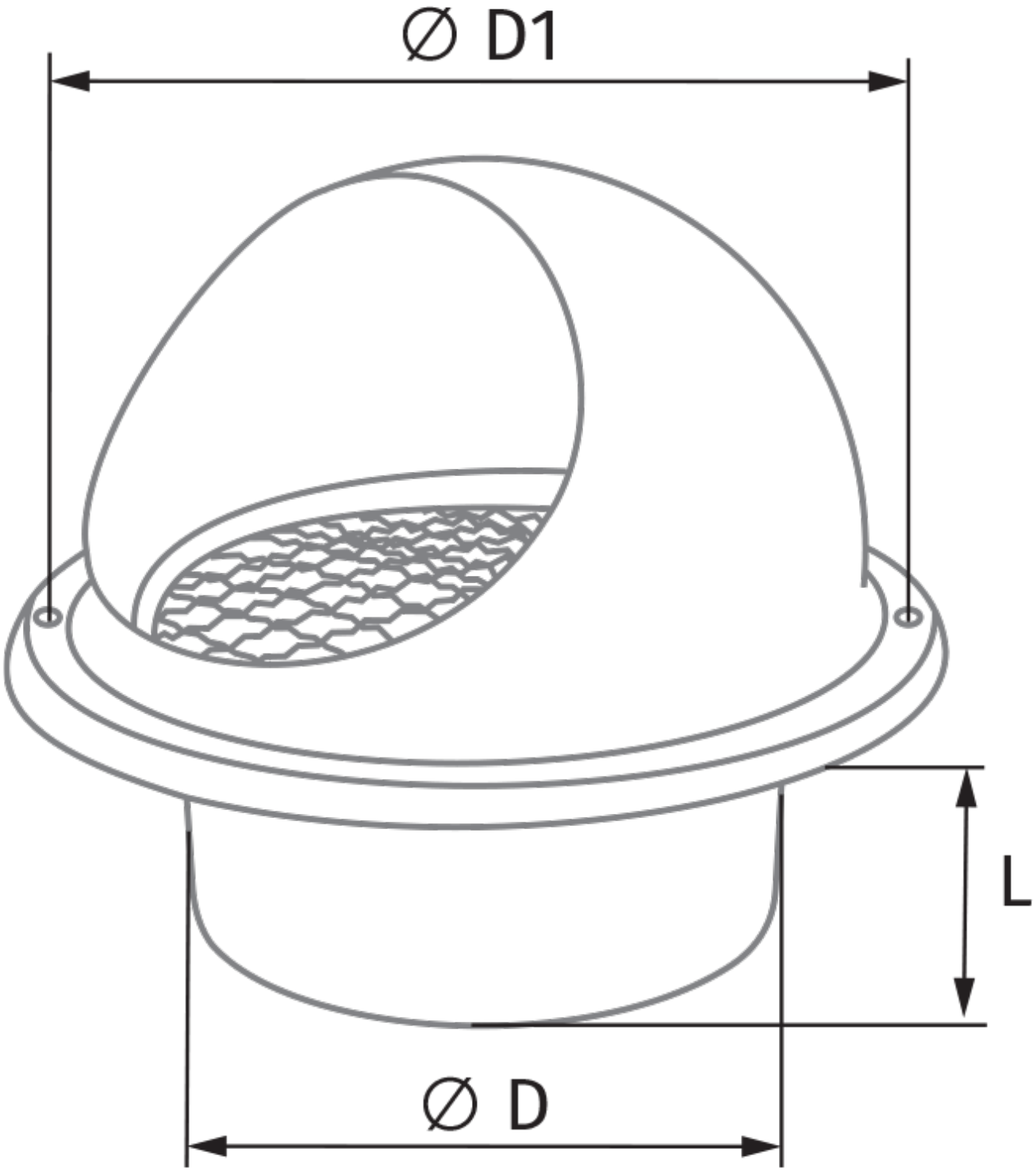
Ø D1
L
Ø D