MV 125 bV ASA



Supply and exhaust plastic grilles

• Casing material: ASA Plastic

	Unit of measurement	MV 125 bV ASA
Connected air duct size	mm	125

Dimensions

L	B	D1	D
29	148	125	160

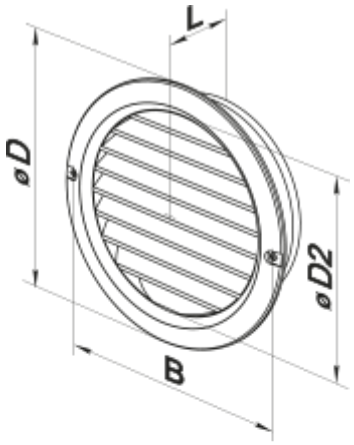
L
øD
øD2
B

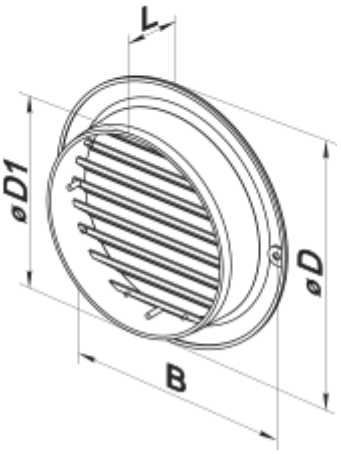
L
øD1
øD
B