MV 123/150 V

Two-piece plastic grilles with angled louvers, optional flange

• Casing material: Plastic

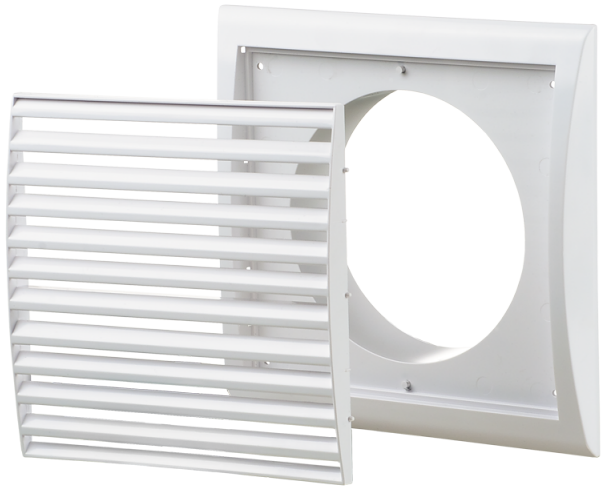

	Unit of measurement	MV 123/150 V
Connected air duct size	mm	150

Dimensions

B	H	B1	H1	L	L1	D
193	188	151	135	18	35	150

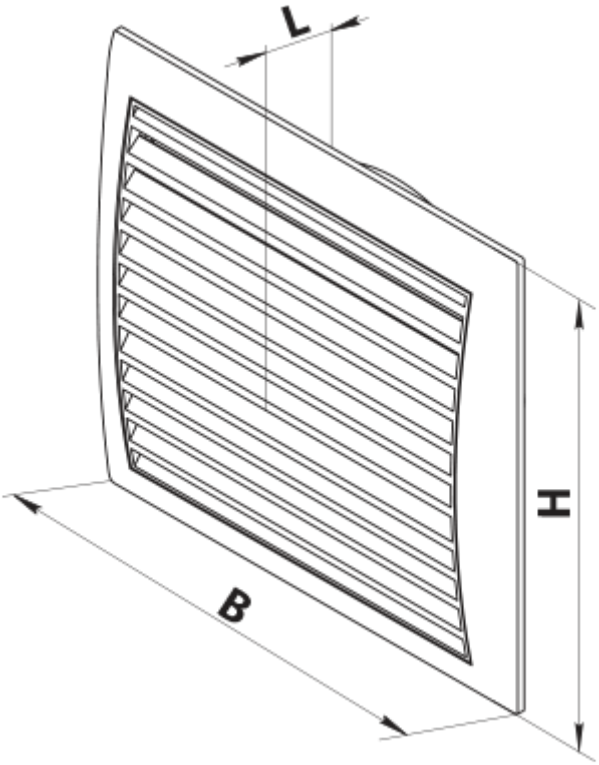
L
H
B

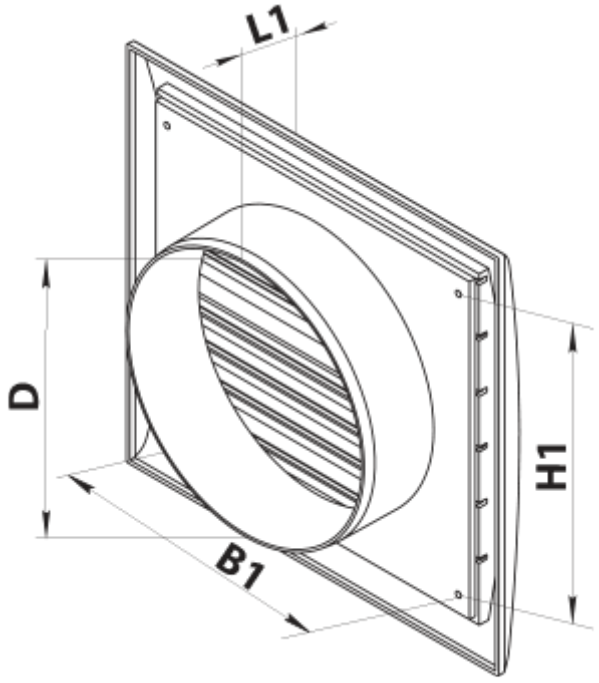
L1
D
H1
B1