MV 122 VNK

Supply and exhaust hoods

• Casing material: Plastic



	Unit of measurement	MV 122 VNK
Connected air duct size	mm	120

Dimensions

B	H	L	L1	L2	D
186	142	15	115	101	100, 110, 120, 130, 150

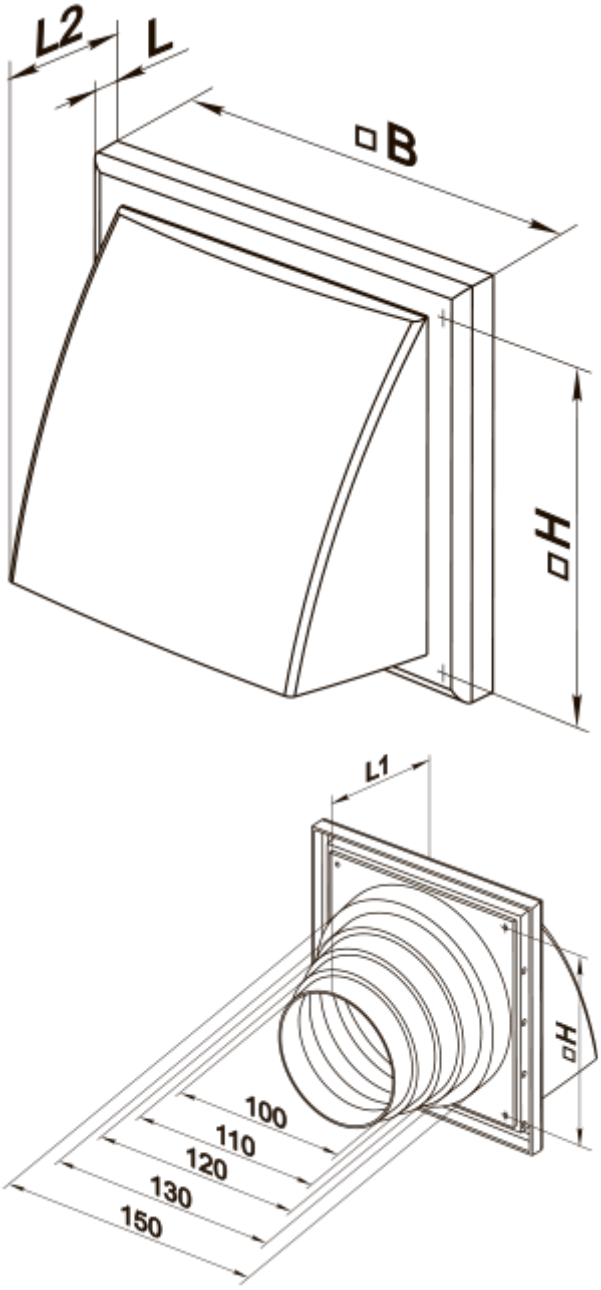
L2
L
B
H
L1
H
100
110
120
130
150