MV 103 s

Two-piece plastic grilles with angled louvers, optional flange

- Casing material: Plastic
- Options for grilles: Insect screen



	Unit of measurement	MV 103 s

Dimensions

B	H	B1	H1	L
156	151	110	95	18

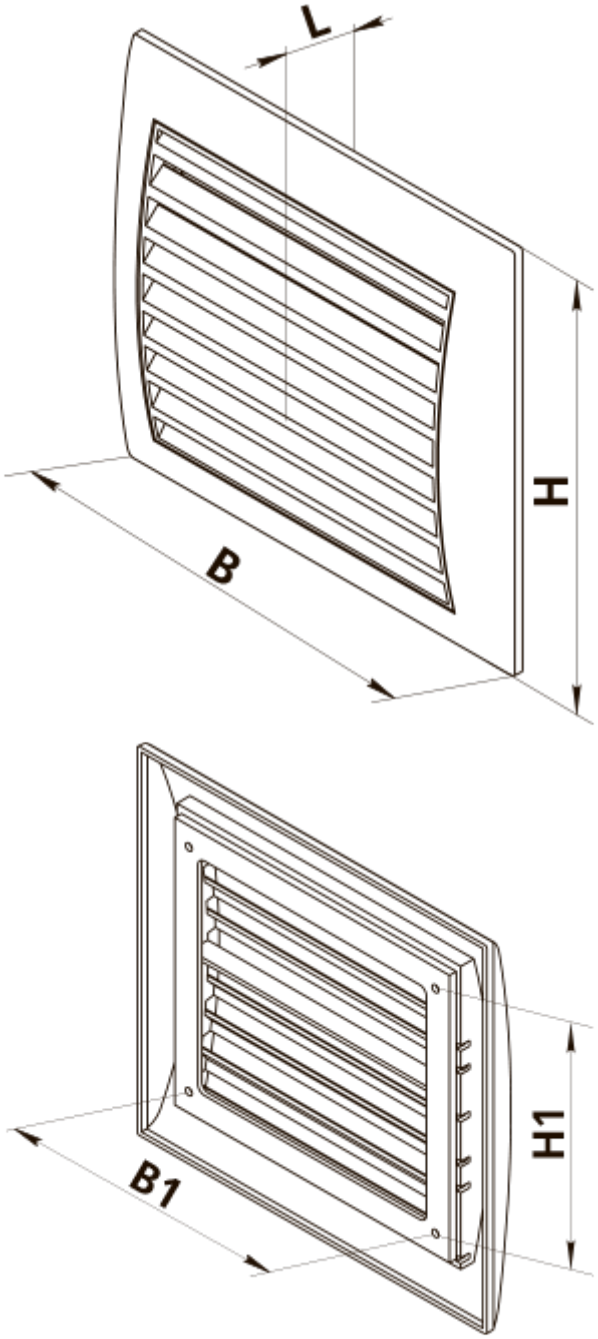
L
H
B
H1
B1