# MV 102 VUK ASA



Supply and exhaust hoods

- Casing material: ASA Plastic

| | Unit of measurement | MV 102 VUK ASA |
|---|---|---|

## Dimensions

| B | H | L | L1 | L2 | D |
|---|---|---|---|---|---|
| 154 | 110 | 15 | 39 | 87 | 100, 125, 55 x 110 |

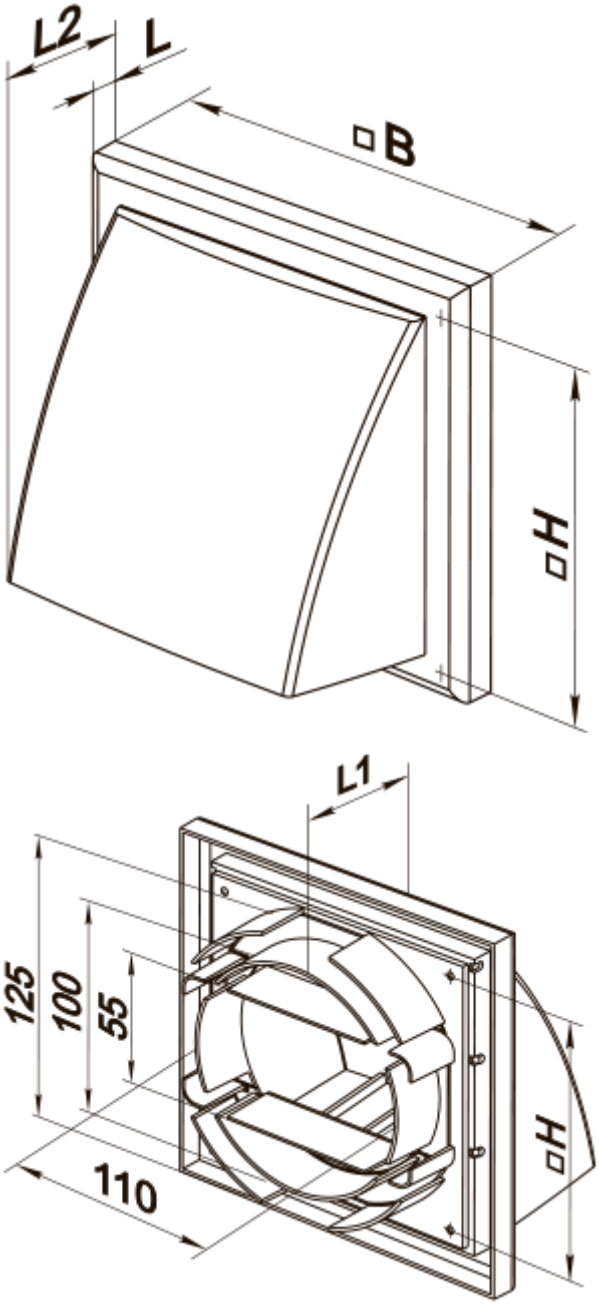
L2
L
B
H
L1
125
100
55
110
H