TT PRO 250 EC Un



Mixed-flow inline fans with EC-motors

- Sound pressure level LpA at 3 m: 53
- Impeller type: Mixed-flow
- Casing material: Polypropylene
- Installation in any position
- Cable with mains plug
- Temperature sensor

	Unit of measurement	TT PRO 250 EC Un
Connected air duct size	mm	250
Phases	-	1
Minimum supply voltage	V	230
Maximum supply voltage	V	230
Power supply frequency	Hz	50/60
Rated power	W	169
Unit current	A	1.38
Maximum airflow	m^3/h	1285
Rotation speed at 50hz	-	2870
Sound pressure level LpA at 3 m	dB(A)	53
Weight	kg	7.8
Transported air temperature (max)	°C	55
Transported air temperature (min)	°C	-25
Ingress protection rating	-	IPX4
Impeller material	-	Plastic

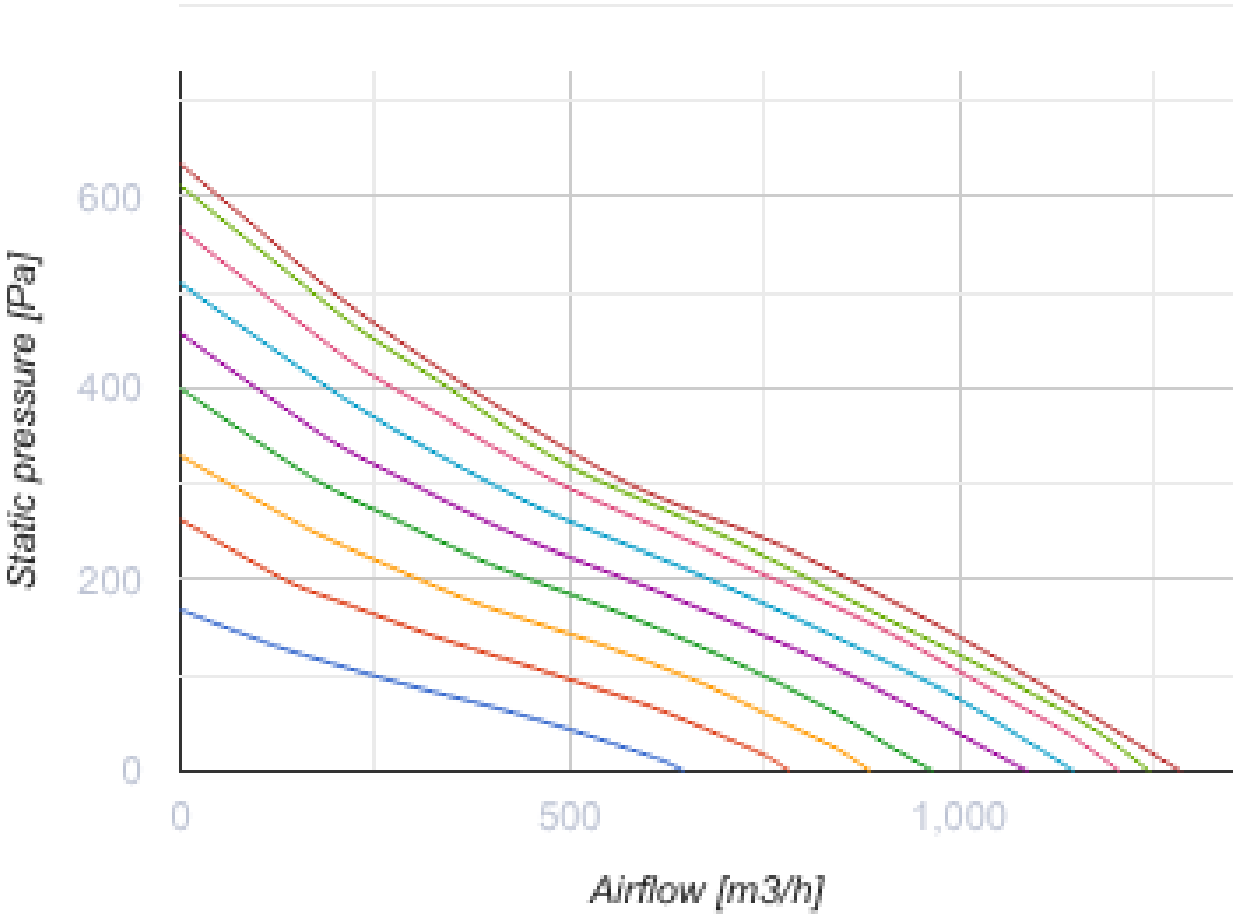
Static pressure [Pa]
600
400
200
0
0
500
1,000
Airflow [m3/h]

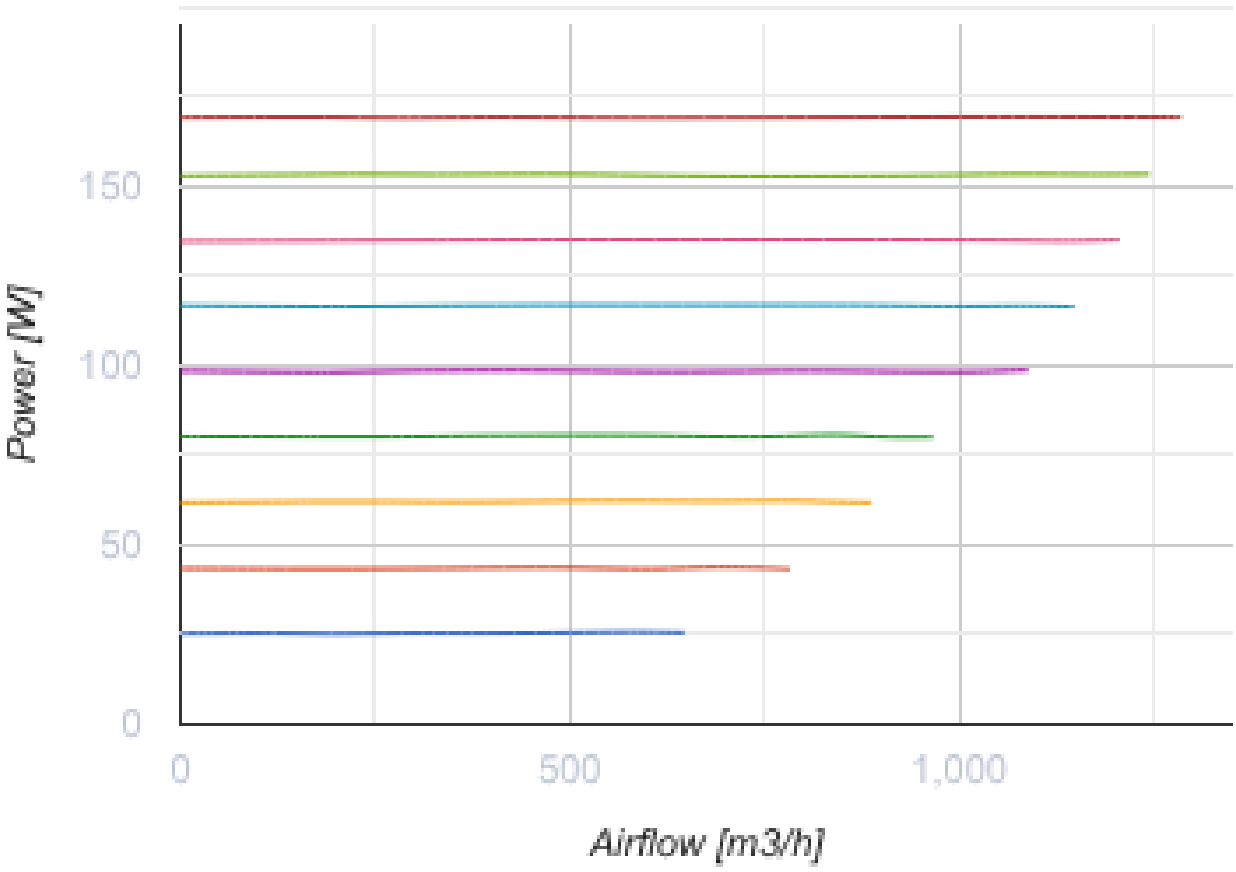

Dimensions

ØD	B	H	L
247	288	339	383

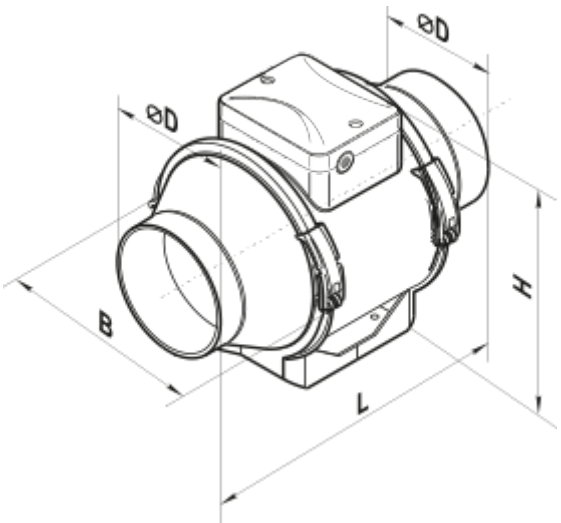

Ecodesign

Trademark	Vents
Model	TT PRO 250 EC Un
Type of drive installed	Integrated VSD
Type of heat recovery system	None
Nominal external pressure (Pa)	234
Maximum external leakage rates (%)	2.7
Static efficiency (%)	34.8
Declared typology	NRVU UVU
Effective electric power input (kW)	0.169
Sound power level (dB(A))	73