Lumis 100 (220 V/60 Hz) K

Round axial extract fans with a built-in light source

- Lighting
- Impeller type: Axial
- Casing material: Plastic
- Backdraft protection: Backdraft damper



	Unit of measurement	Lumis 100 (220 V/60 Hz) K
Connected air duct size	mm	100
Minimum supply voltage	V	220
Maximum supply voltage	V	220
Power supply frequency	Hz	60
Weight	kg	0.79
Ambient air temperature min	°C	1
Ambient air temperature max	°C	40
Ingress protection rating	-	IP24
Impeller material	-	Plastic

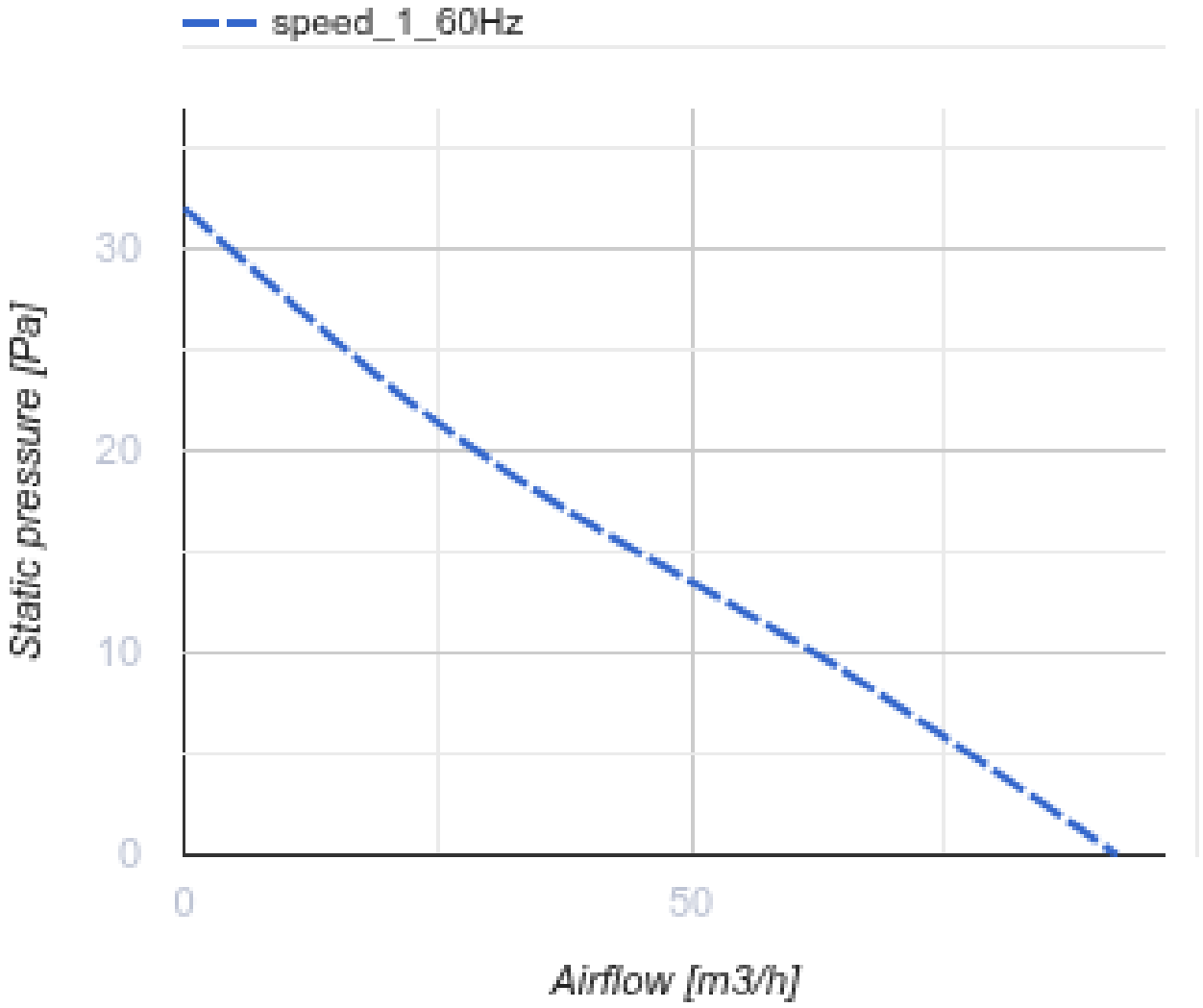

Dimensions

Ø D1	Ø D	L	L1
178	99.4	133.5	46

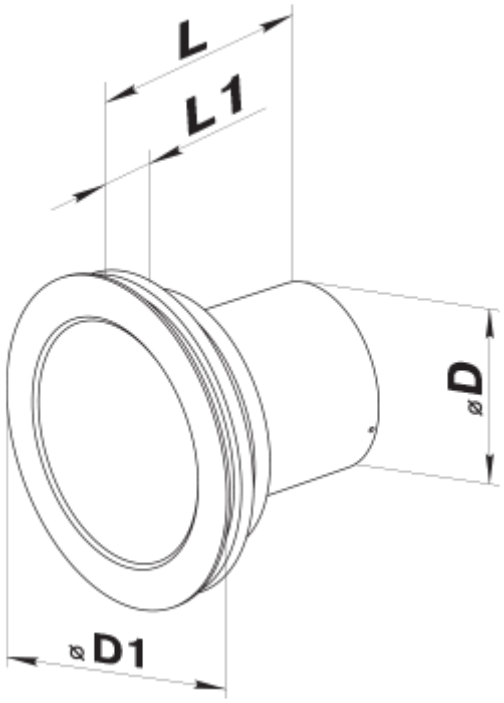

Accessories

Plastic

Name	Photo	Description
MV 100 V		Two-piece plastic grilles with angled louvers

Fittings

Name	Photo	Description
PVT 050/10		The adhesive PVC tape is an insulation tape made of plasticized PVC base covered with a glue layer
PVT 050/30		The adhesive PVC tape is an insulation tape made of plasticized PVC base covered with a glue layer
PVT 050/50		The adhesive PVC tape is an insulation tape made of plasticized PVC base covered with a glue layer
C 100		The clamps are designed for quick and reliable mounting and connection of various round ventilation system components. Clamps are made of stainless steel band

Flat duct

Name	Photo	Description

1805		Wall mounting

Flexible ducts

Name	Photo	Description
Polyvent N		Flexible uninsulated air duct made of metallized film

Window vents

Name	Photo	Description
PO 400		Window ventilators for supply ventilation

Plastic

Name	Photo	Description
MV 102 VK		Supply and exhaust hoods

Metal

Name	Photo	Description
MVM 102 V N		Exhaust metal hoods