KV TwinFresh Expert RW

Control panels for controlling Style decentralized ventilators

- Casing material: Plastic



	Unit of measurement	KV TwinFresh Expert RW
Minimum supply voltage	V	110
Maximum supply voltage	V	230
Power supply frequency	Hz	50/60
Weight	kg	0.19
Ambient air temperature min	°C	10
Ambient air temperature max	°C	45
Ingress protection rating	-	IP40

Dimensions

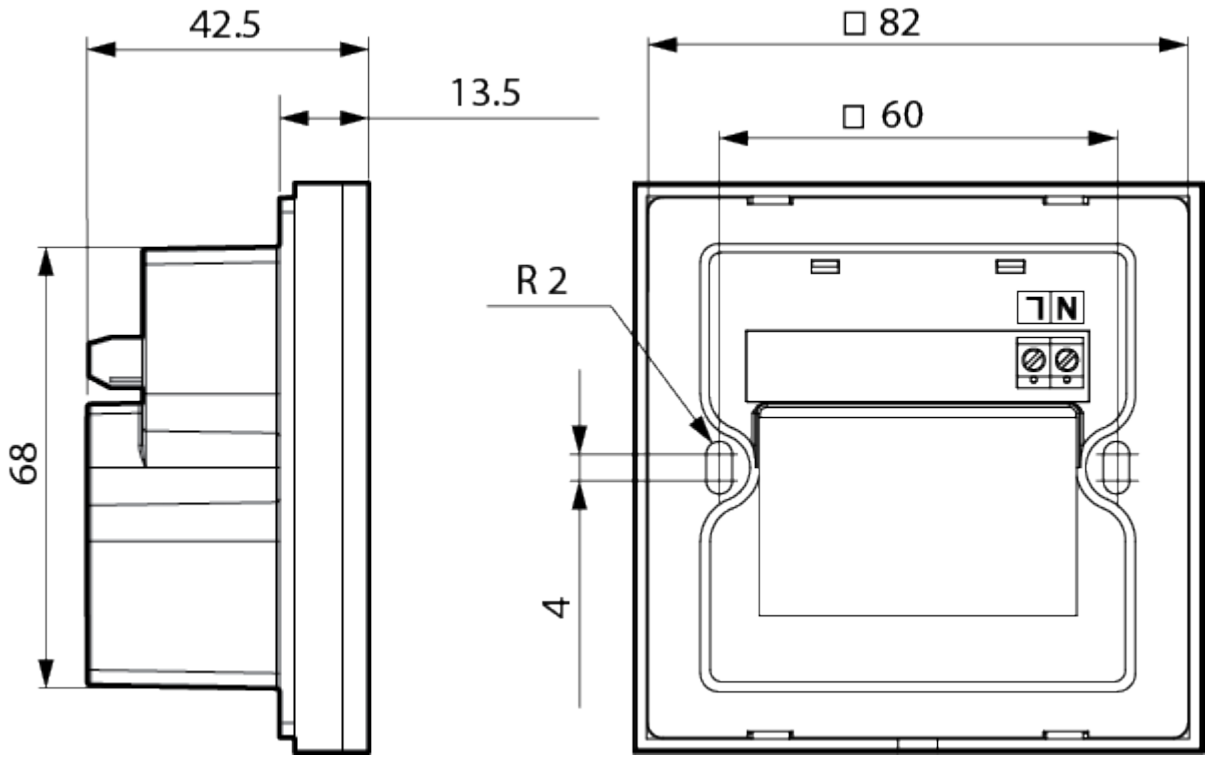
42.5
13.5
□ 82
□ 60
R 2
68
4
L
N