KV 900x500

The droplet separators are designed to remove condensed droplets from the air in the ventilation air ducts

• Casing material: Galvanized steel

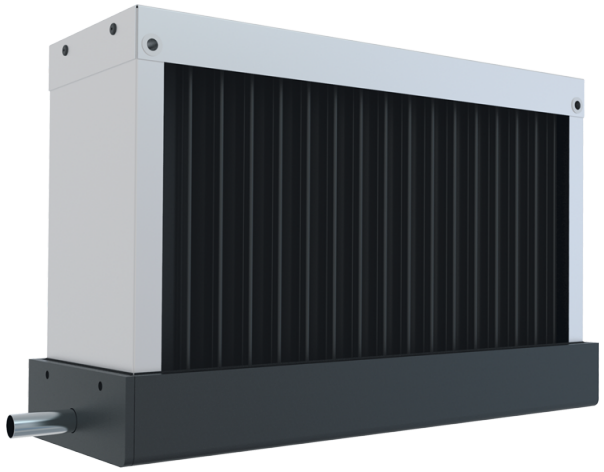

	Unit of measurement	KV 900x500
Weight	kg	13

Dimensions

A	B	C
1003	593	163

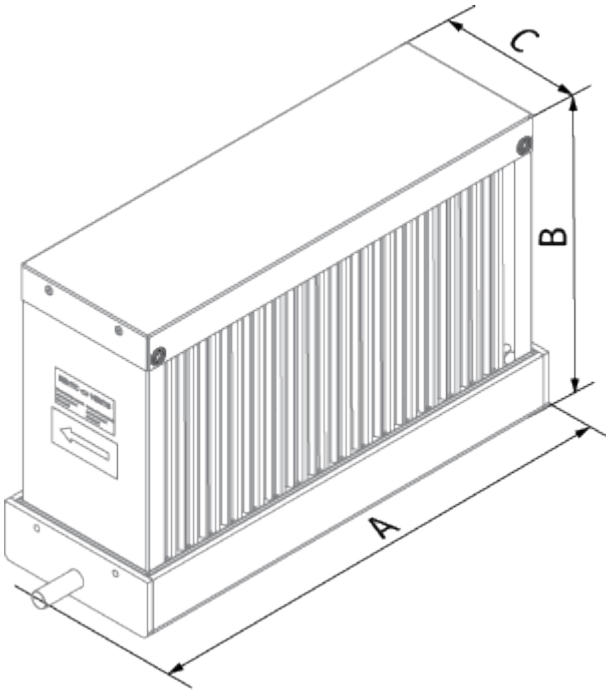
C
B
A