KV 800x500

The droplet separators are designed to remove condensed droplets from the air in the ventilation air ducts

• Casing material: Galvanized steel

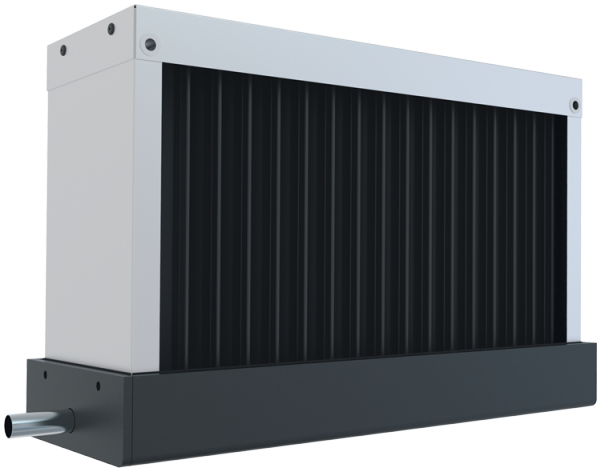

	Unit of measurement	KV 800x500
Weight	kg	11.7

Dimensions

A	B	C
903	593	163

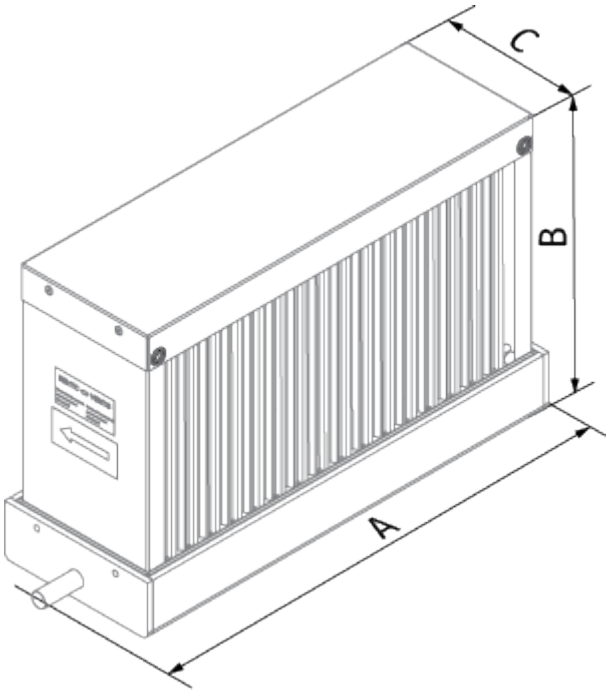
C
B
A