KV 700x400

The droplet separators are designed to remove condensed droplets from the air in the ventilation air ducts

- Casing material: Galvanized steel

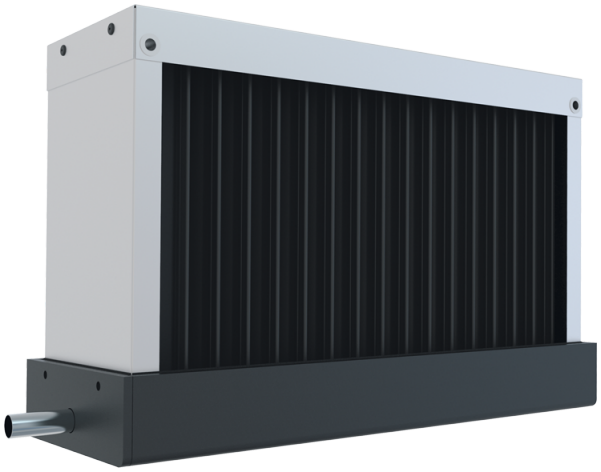

	Unit of measurement	KV 700x400
Weight	kg	9.3

Dimensions

A	B	C
803	493	163

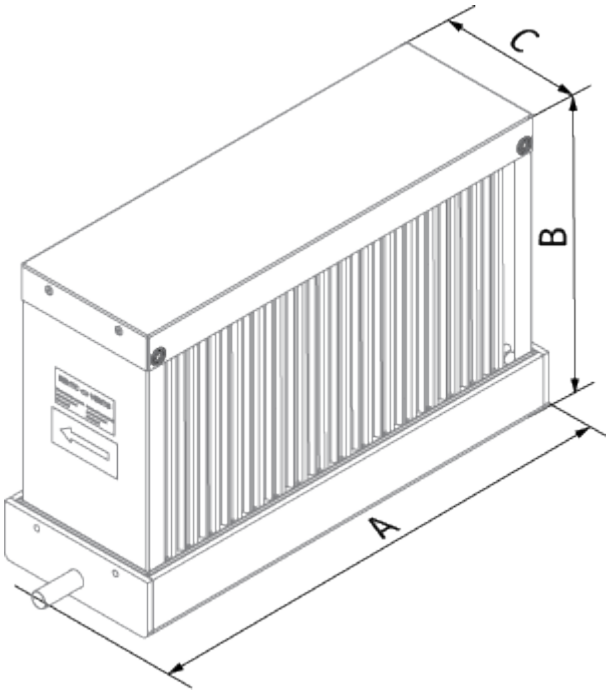
C
B
A