KV 600x300

The droplet separators are designed to remove condensed droplets from the air in the ventilation air ducts

• Casing material: Galvanized steel

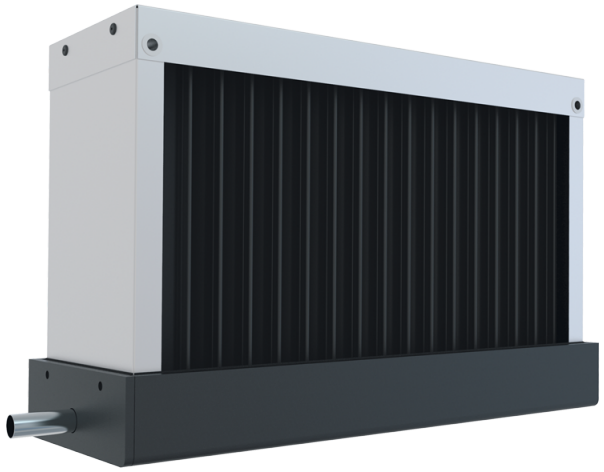

	Unit of measurement	KV 600x300
Weight	kg	7.1

Dimensions

A	B	C
703	393	163

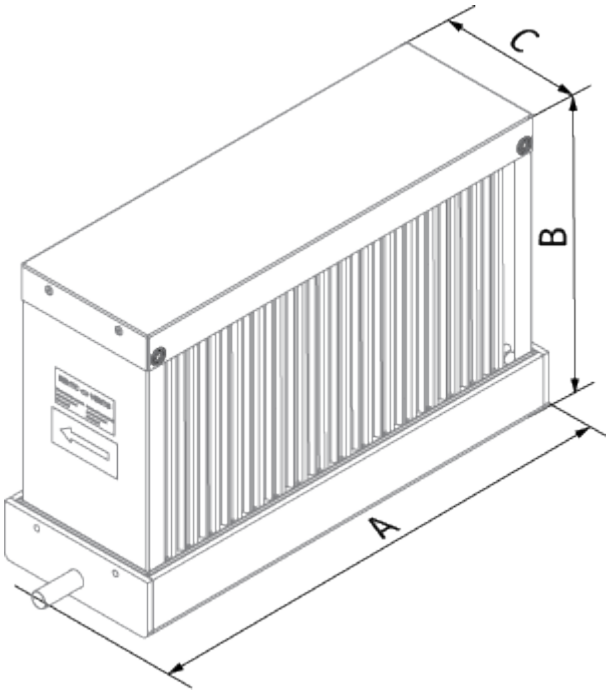
C
B
A