KV 500x250

The droplet separators are designed to remove condensed droplets from the air in the ventilation air ducts

• Casing material: Galvanized steel

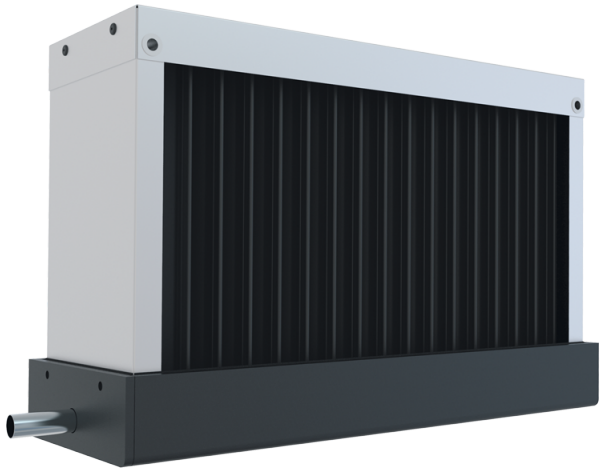

	Unit of measurement	KV 500x250
Weight	kg	5.7

Dimensions

A	B	C
603	343	163

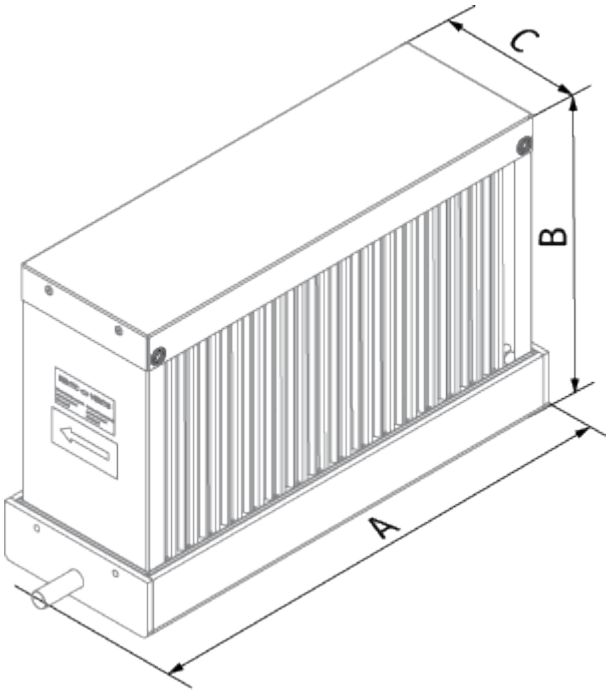
C
B
A