# KV 1000x500

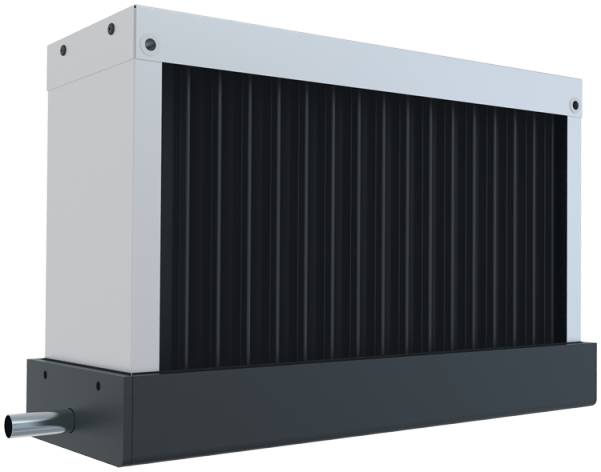

The droplet separators are designed to remove condensed droplets from the air in the ventilation air ducts

- Casing material: Galvanized steel

| | Unit of measurement | KV 1000x500 |
|---|---|---|
| Weight | kg | 14.2 |

## Dimensions

| A | B | C |
|---|---|---|
| 1103 | 593 | 163 |

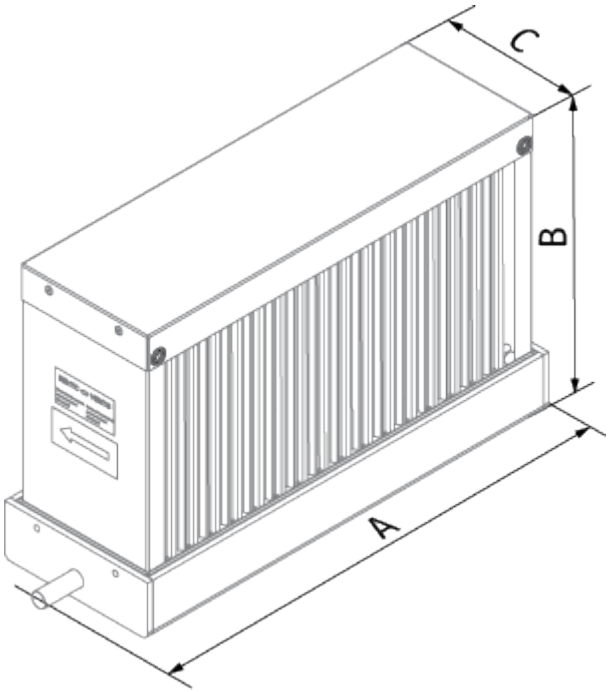
C
B
A