KSK 450 6D



Kitchen inline fans in sound-insulated casing with operational temperature of 120 °C

• Sound pressure level LpA at 3 m: 49
• Sound-insulated casing
• Impeller type: Centrifugal impeller with backward curved blades
• Casing material: Galvanized steel

	Unit of measurement	KSK 450 6D
Connected air duct size	mm	450
Phases	-	3
Minimum supply voltage	V	400
Maximum supply voltage	V	400
Power supply frequency	Hz	50
Rated power	W	454
Unit current	A	1.33
Maximum airflow	m^3/h	4991
Rotation speed at 50hz	-	920
Sound pressure level LpA at 3 m	dB(A)	49
Weight	kg	105
Transported air temperature (max)	°C	110
Transported air temperature (min)	°C	-20
Maximum transported air temperature	-	120°C CONTINUOUS
Ingress protection rating	-	IP54
Impeller material	-	Galvanized steel
Size	mm	450

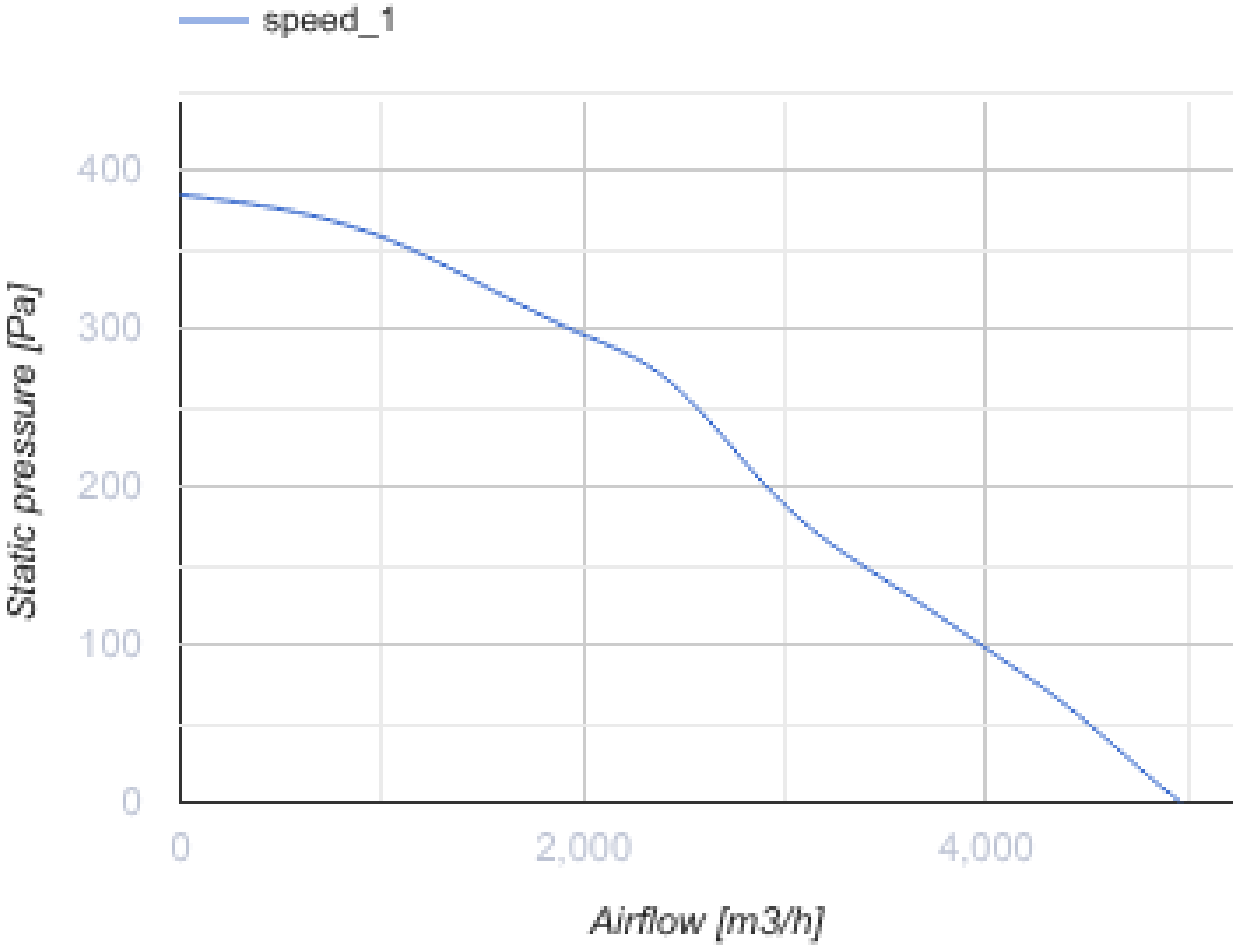
speed_1
400
300
200
100
0
Static pressure [Pa]
0
2,000
4,000
Airflow [m3/h]

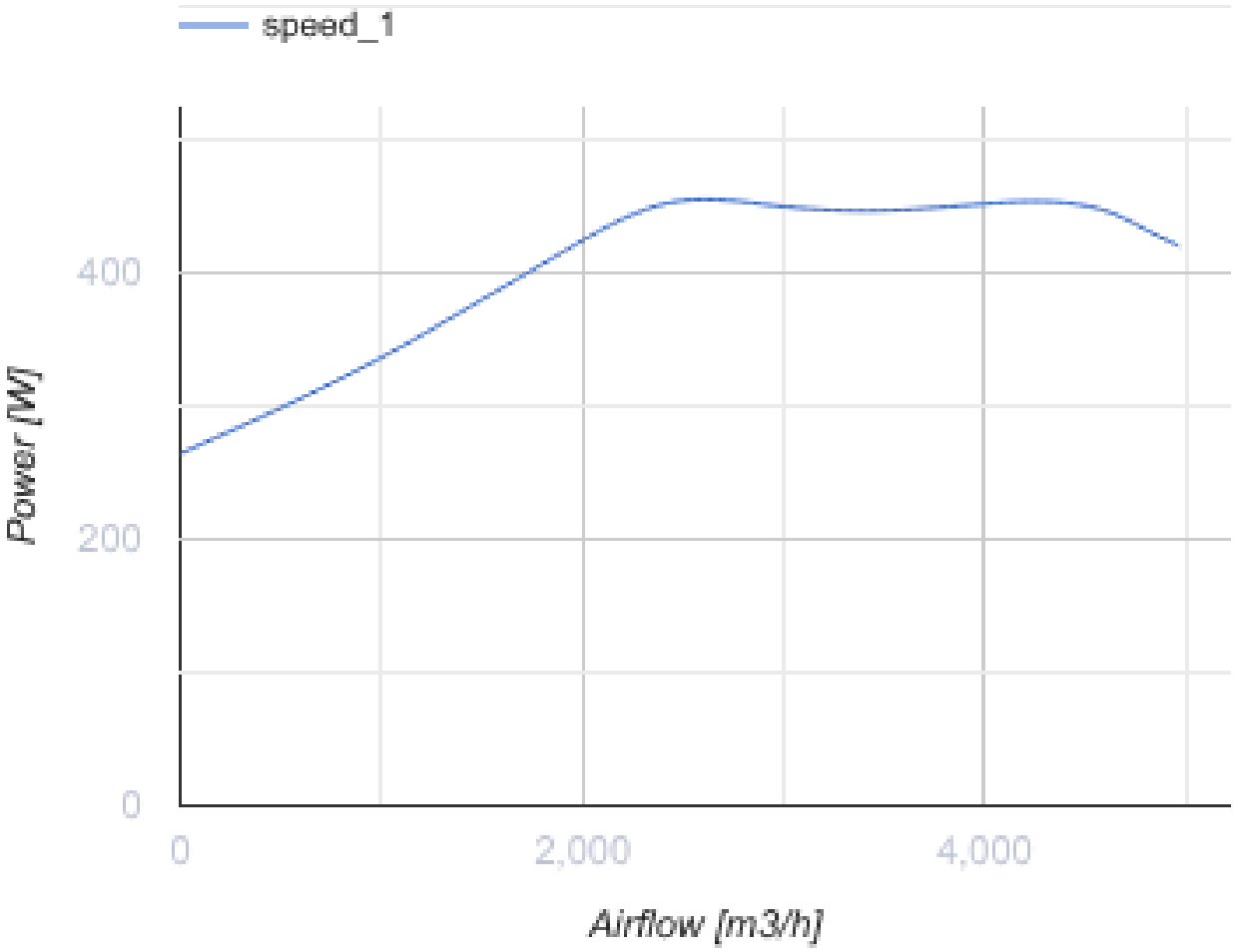

Dimensions

ØD	B	B1	H	H1	L	L1	L2	L3	L4
450	996	750	980	870	925	900	850	739	437

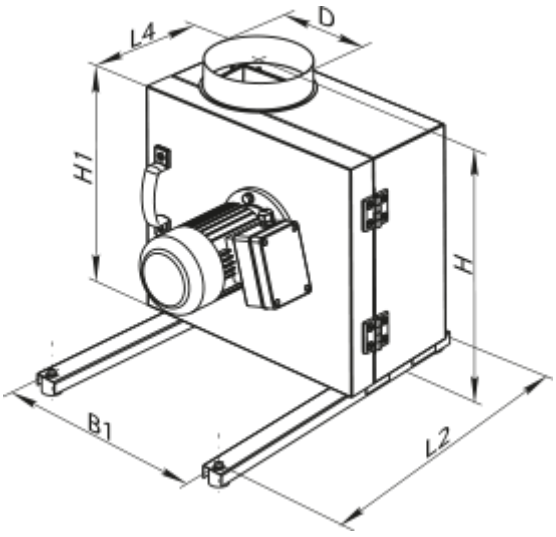

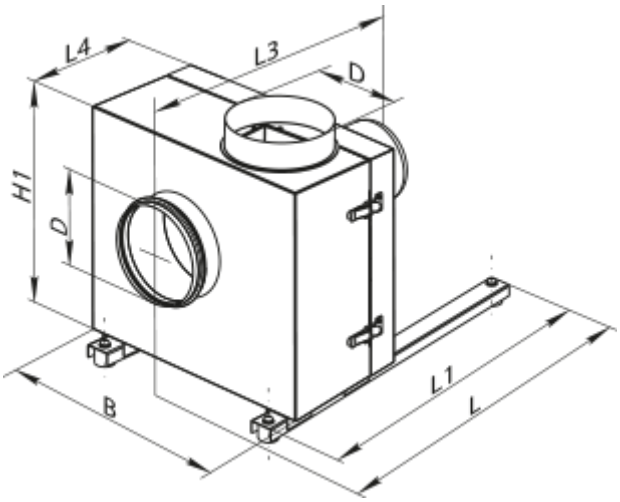

Accessories

For round ducts

Name	Photo	Description
VVG 450	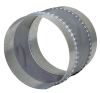	Flexible anti-vibration inserts for round ducts

Speed controllers

Name	Photo	Description
RSA5D-1,5-M		Three phase speed controller