KSK 315 2D



Kitchen inline fans in sound-insulated casing with operational temperature of 120 °C

• Sound pressure level LpA at 3 m: 52
• Sound-insulated casing
• Impeller type: Centrifugal impeller with backward curved blades
• Casing material: Galvanized steel

	Unit of measurement	KSK 315 2D
Connected air duct size	mm	315
Phases	-	3
Minimum supply voltage	V	400
Maximum supply voltage	V	400
Power supply frequency	Hz	50/60
Rated power	W	1225
Unit current	A	2.8
Maximum airflow	m^3/h	4710
Rotation speed at 50hz	-	3025
Sound pressure level LpA at 3 m	dB(A)	52
Weight	kg	60
Transported air temperature (max)	°C	110
Transported air temperature (min)	°C	-20
Maximum transported air temperature	-	120°C CONTINUOUS
Ingress protection rating	-	IP54
Impeller material	-	Galvanized steel
Size	mm	315

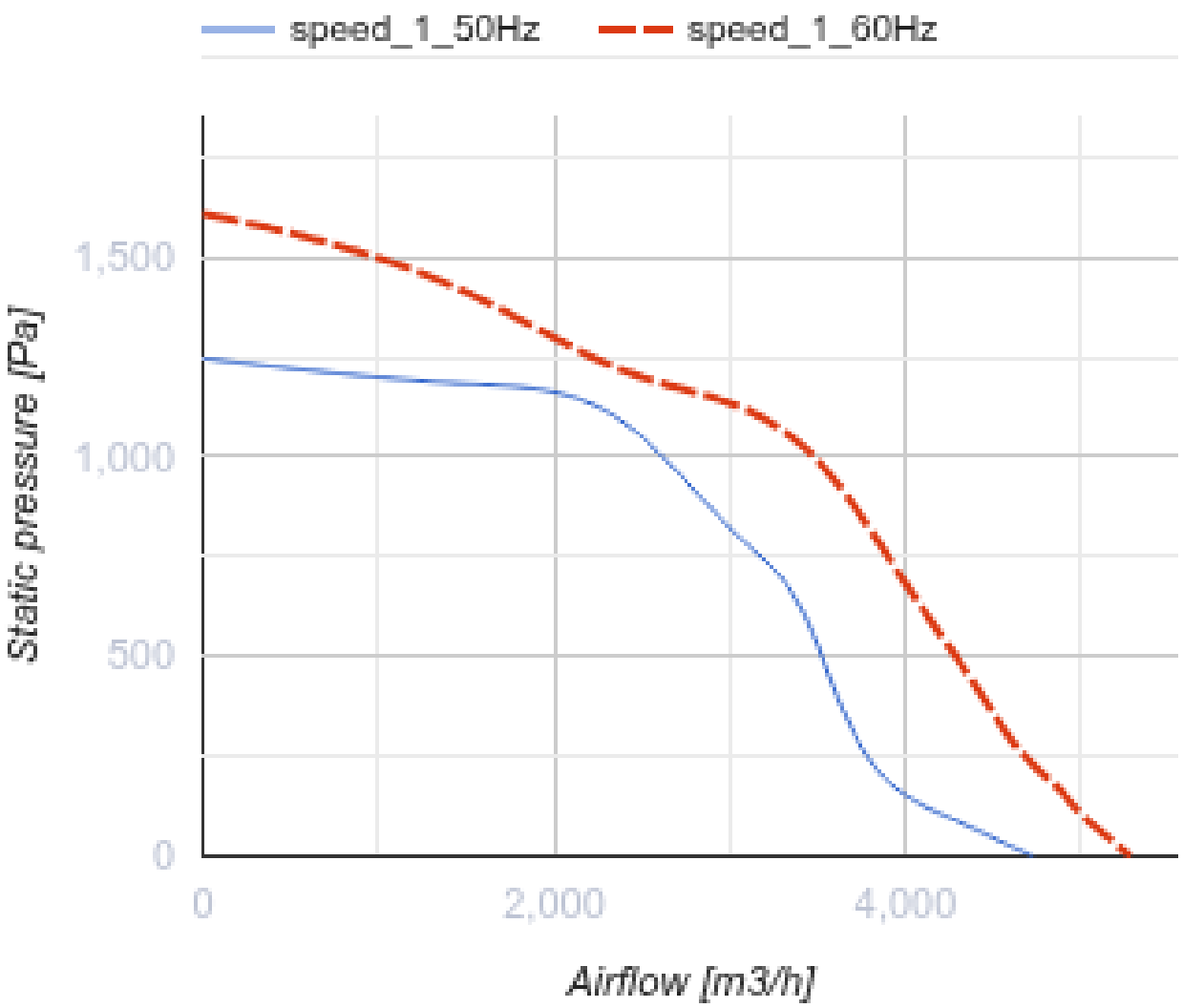
speed_1_50Hz
speed_1_60Hz
1,500
1,000
500
0
Static pressure [Pa]
0
2,000
4,000
Airflow [m3/h]

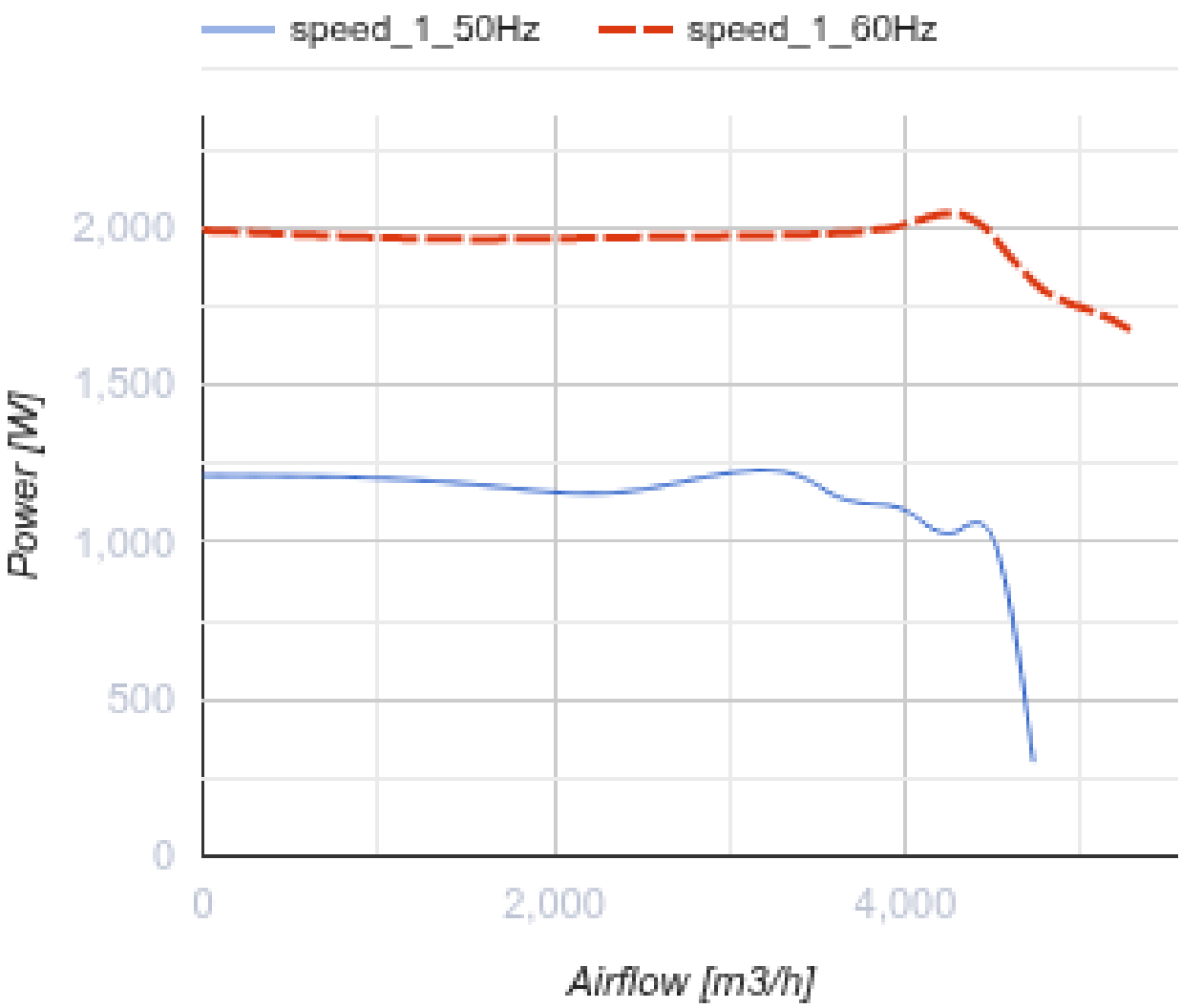

Dimensions

ØD	B	B1	H	H1	L	L1	L2	L3	L4
315	690	550	708	600	715	700	650	672	327

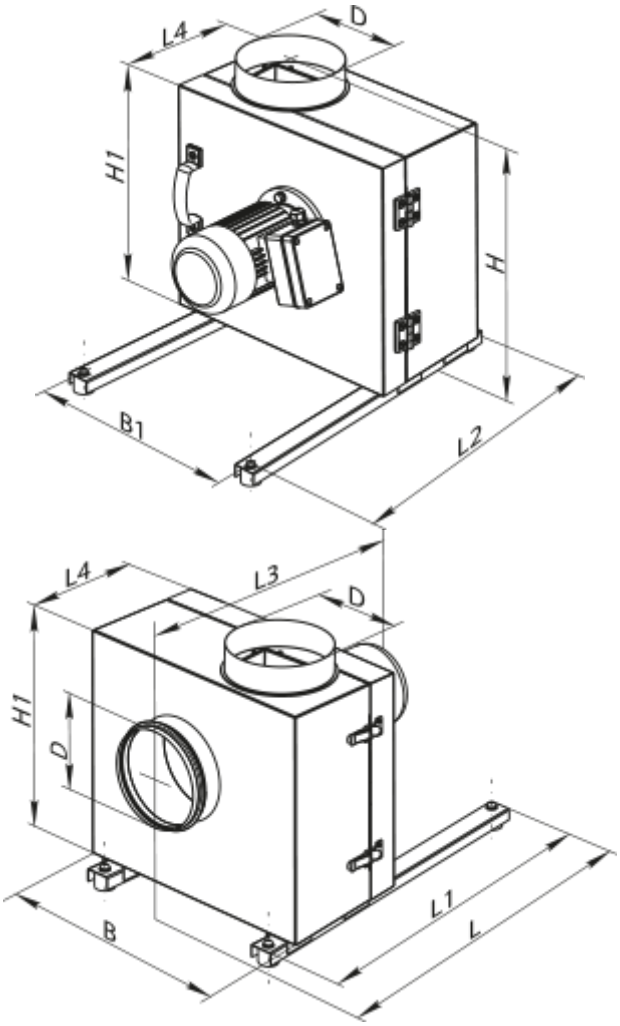

Accessories

For round ducts

Name	Photo	Description
KOM 315		Backdraught damper with spring-loaded plates for shutting off air flow in round air ducts

For round ducts

Name	Photo	Description
VVG 315	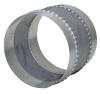	Flexible anti-vibration inserts for round ducts

Speed controllers

Name	Photo	Description

RSA5D-4,0-M		Three phase speed controller