KSK 200 4D



Kitchen inline fans in sound-insulated casing with operational temperature of 120 °C

• Sound pressure level LpA at 3 m: 45
• Sound-insulated casing
• Impeller type: Centrifugal impeller with forward curved blades
• Casing material: Galvanized steel

	Unit of measurement	KSK 200 4D
Connected air duct size	mm	200
Phases	-	3
Minimum supply voltage	V	400
Maximum supply voltage	V	400
Power supply frequency	Hz	50
Rated power	W	750
Unit current	A	2
Maximum airflow	m^3/h	1650
Rotation speed at 50hz	-	1465
Sound pressure level LpA at 3 m	dB(A)	45
Weight	kg	25
Transported air temperature (max)	°C	120
Transported air temperature (min)	°C	-20
Maximum transported air temperature	-	120°C CONTINUOUS
Ingress protection rating	-	IP54
Impeller material	-	Galvanized steel
Size	mm	200

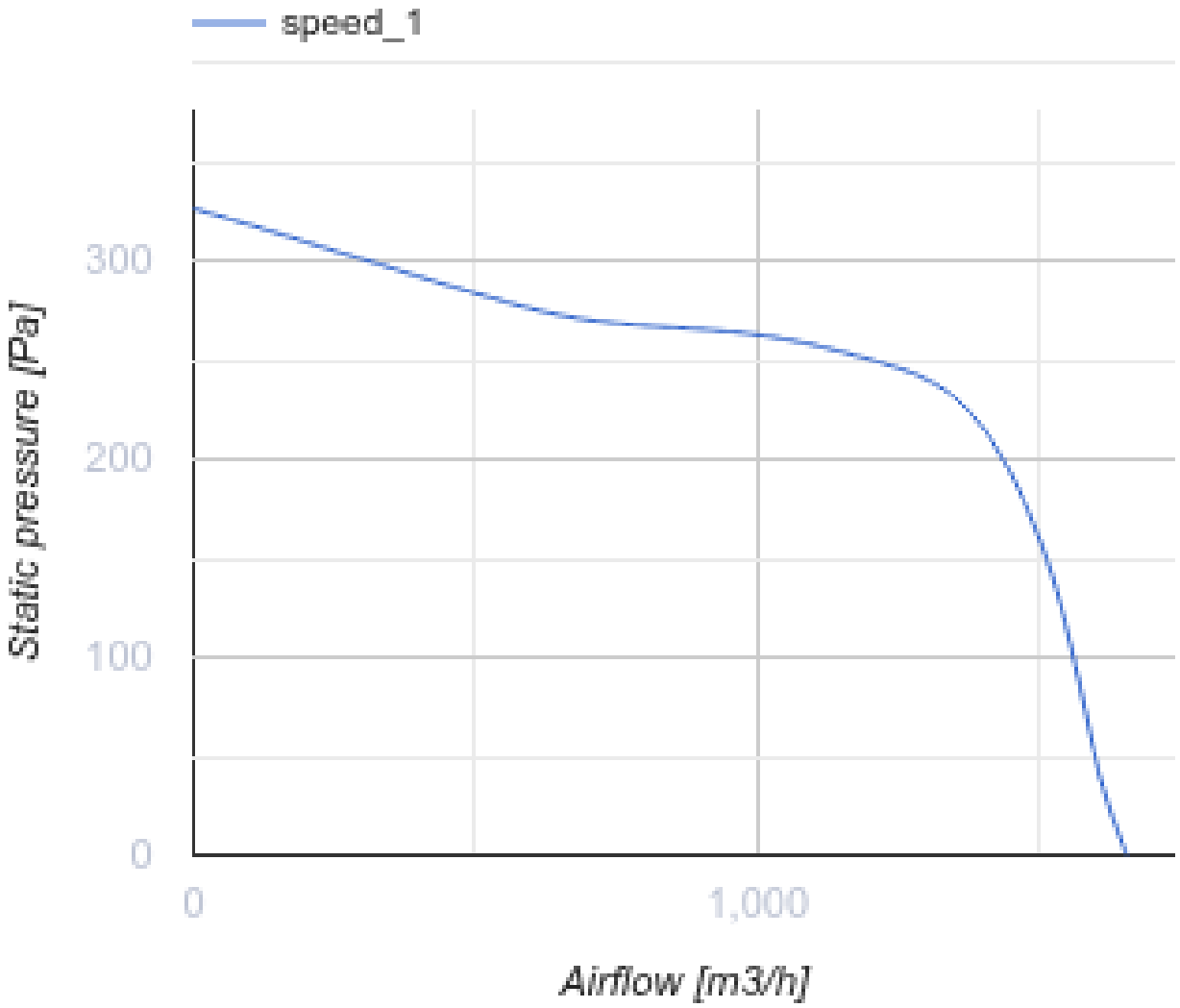
speed_1
300
200
100
0
Static pressure [Pa]
0
1,000
Airflow [m3/h]

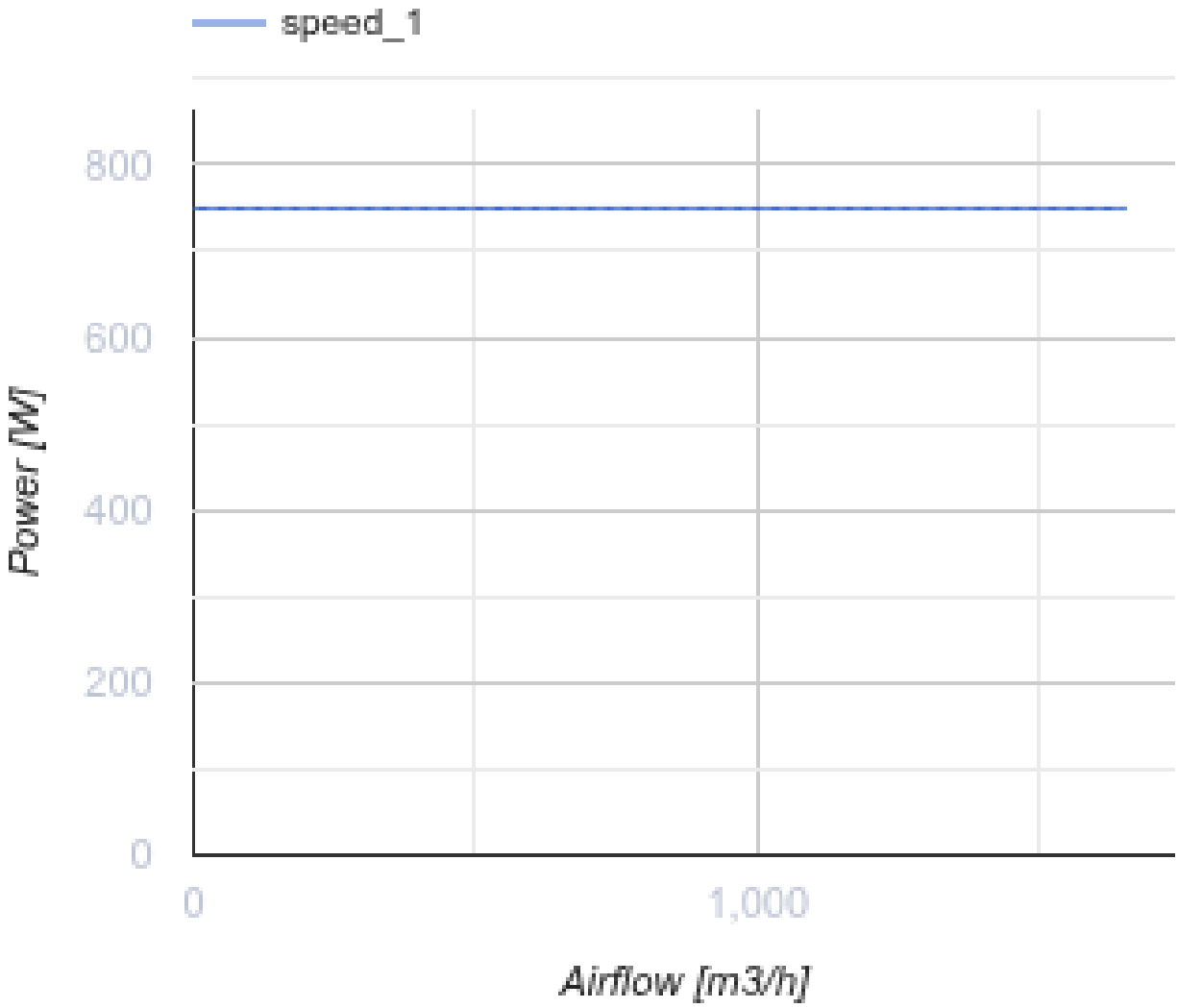

Dimensions

ØD	B	B1	H	H1	L	L1	L2	L3	L4
200	485	365	600	425	625	600	570	515	235

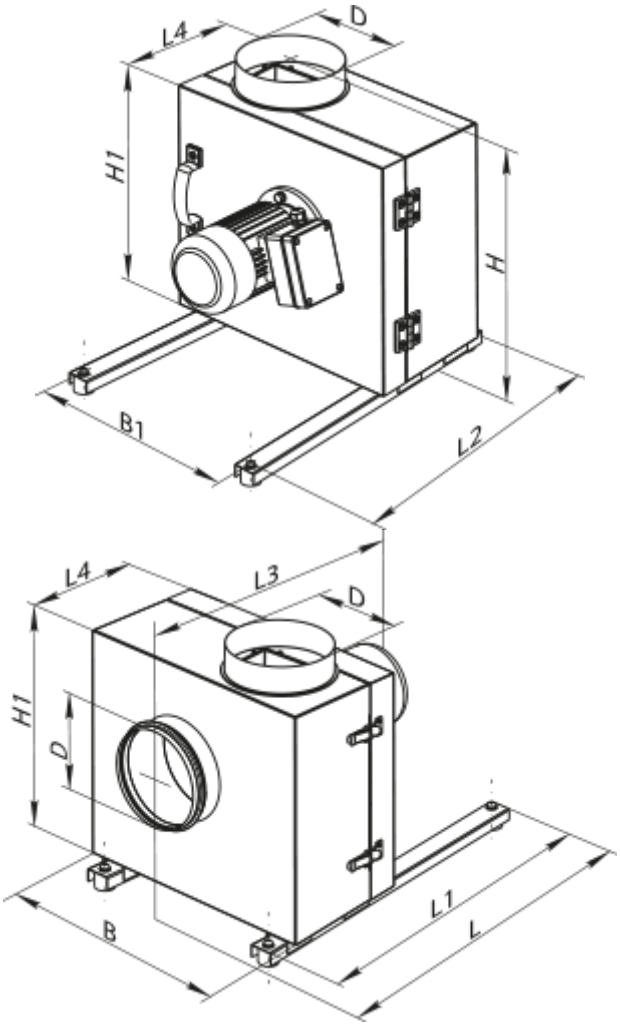

Accessories

For round ducts

Name	Photo	Description
KOM 200		Backdraught damper with spring-loaded plates for shutting off air flow in round air ducts

For round ducts

Name	Photo	Description
VVG 200	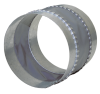	Flexible anti-vibration inserts for round ducts

Speed controllers

Name	Photo	Description

RSA5D-4,0-M		Three phase speed controller