KSF 250 K2 EC

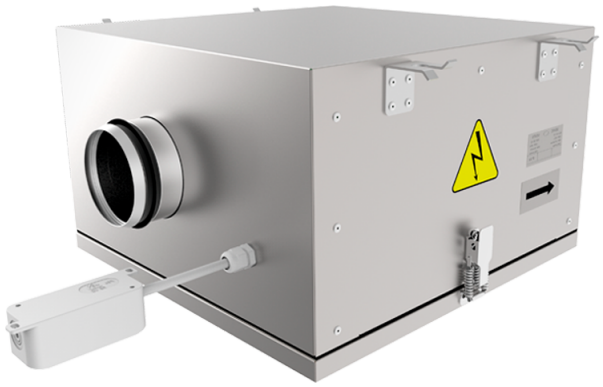

Centrifugal inline fans with forward curved blades in casings with improved sound insulation properties with EC-motors

- Sound pressure level LpA at 3 m: 41
- Sound-insulated casing
- Impeller type: Centrifugal impeller with forward curved blades
- Casing material: Aluzinc
- Installation in any position

	Unit of measurement	KSF 250 K2 EC
Connected air duct size	mm	250
Phases	-	1
Minimum supply voltage	V	230
Maximum supply voltage	V	230
Power supply frequency	Hz	50/60
Rated power	W	374
Unit current	A	1.77
Maximum airflow	m³/h	1682
Rotation speed at 50hz	-	1400
Sound pressure level LpA at 3 m	dB(A)	41
Weight	kg	33
Transported air temperature (max)	°C	50
Transported air temperature (min)	°C	-25
Ingress protection rating	-	IP44
Ingress protection rating of the drive	-	IP54
Impeller material	-	Galvanized steel

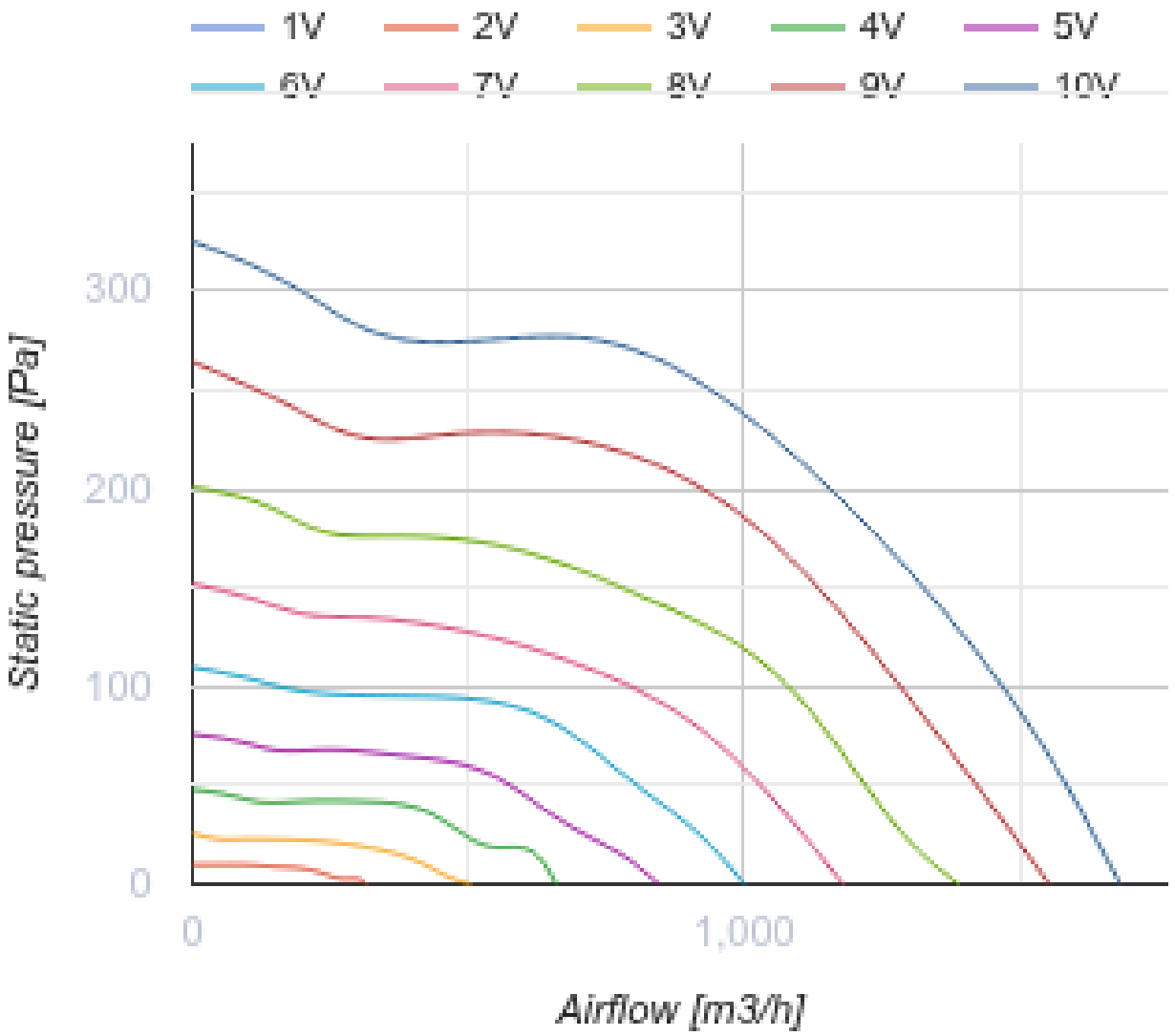
1V
2V
3V
4V
5V
6V
7V
8V
9V
10V
300
200
100
0
Static pressure [Pa]
0
1,000
Airflow [m3/h]

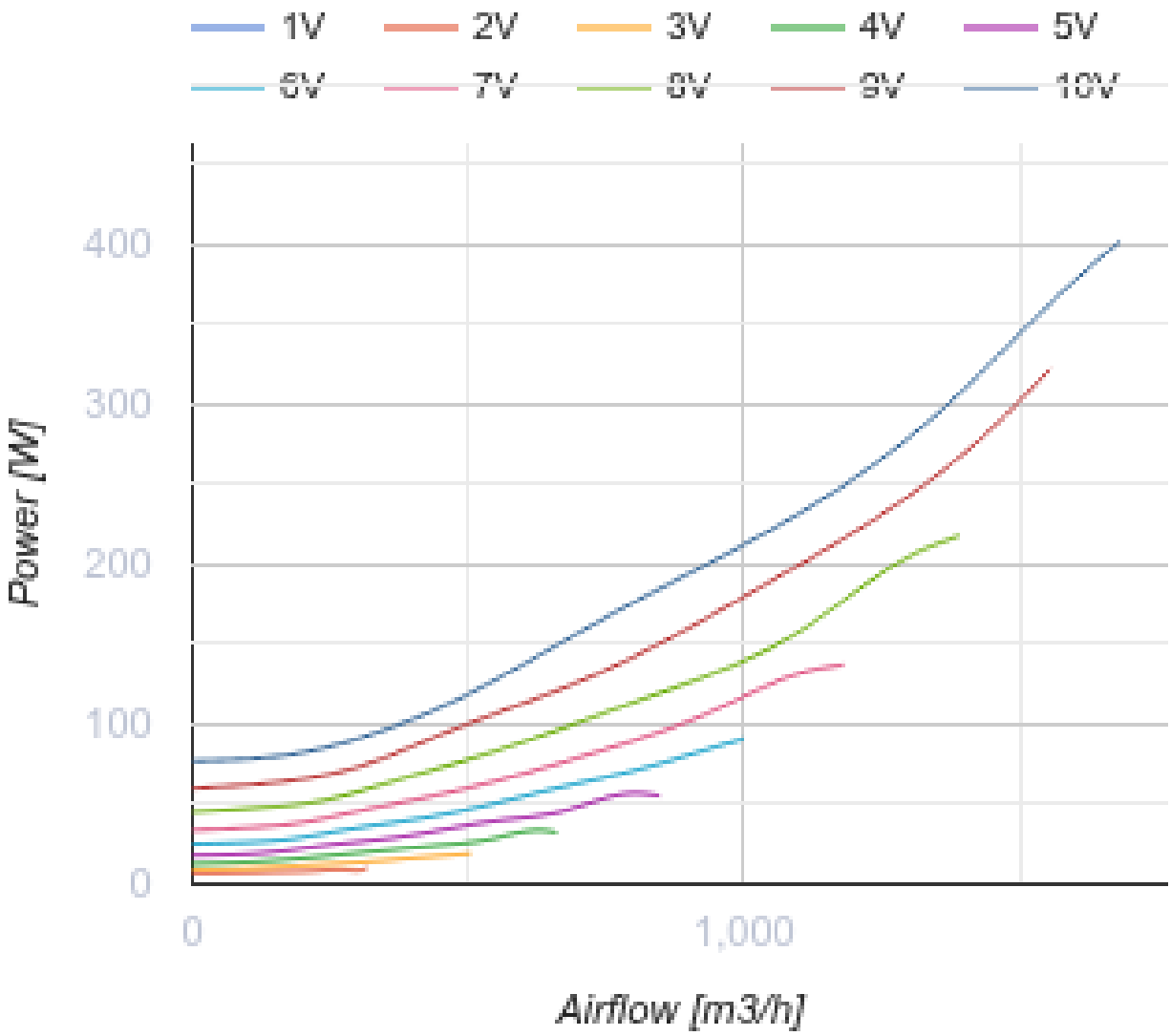

Dimensions

ØD	B	B1	B2	H	L1	L2
247	665	487	742	411	699	606

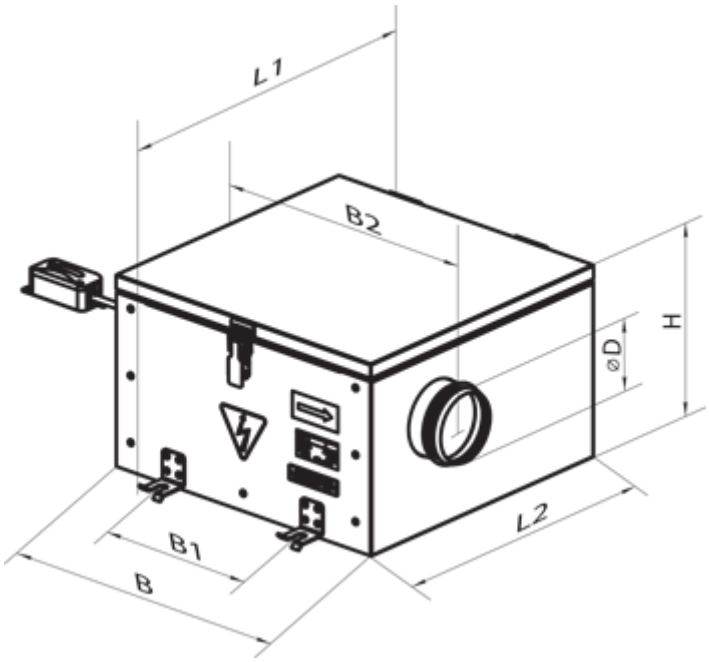
L1
B2
H
ØD
L2
B1
B

Ecodesign

Trademark	Vents
Model	KSF 250 K2 EC
Type of drive installed	Integrated VSD
Type of heat recovery system	None
Nominal external pressure (Pa)	274
Maximum external leakage rates (%)	2.7
Static efficiency (%)	39.8
Declared typology	NRVU UVU
Effective electric power input (kW)	0.168
Sound power level (dB(A))	61