KSB 500 K2 EC R1

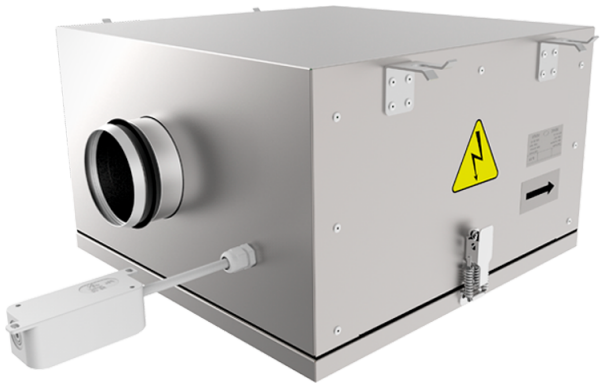

Centrifugal inline fans with backward curved blades in cases with improved sound insulation properties with EC-motors

- Sound pressure level LpA at 3 m: 56
- Sound-insulated casing
- Impeller type: Centrifugal impeller with backward curved blades
- Casing material: Aluzinc
- Installation in any position
- Cable with mains plug

	Unit of measurement	KSB 500 K2 EC R1
Phases	-	1
Maximum supply voltage	V	230
Minimum supply voltage	V	230
Power supply frequency	Hz	50/60
Rated power	W	752
Unit current	A	3.42
Maximum airflow	m³/h	7145
Rotation speed at 50hz	-	1440
Sound pressure level LpA at 3 m	dB(A)	56
Weight	kg	86
Transported air temperature (max)	°C	55
Transported air temperature (min)	°C	-25
Ingress protection rating	-	IPX4
Ingress protection rating of the drive	-	IP54
Impeller material	-	Plastic

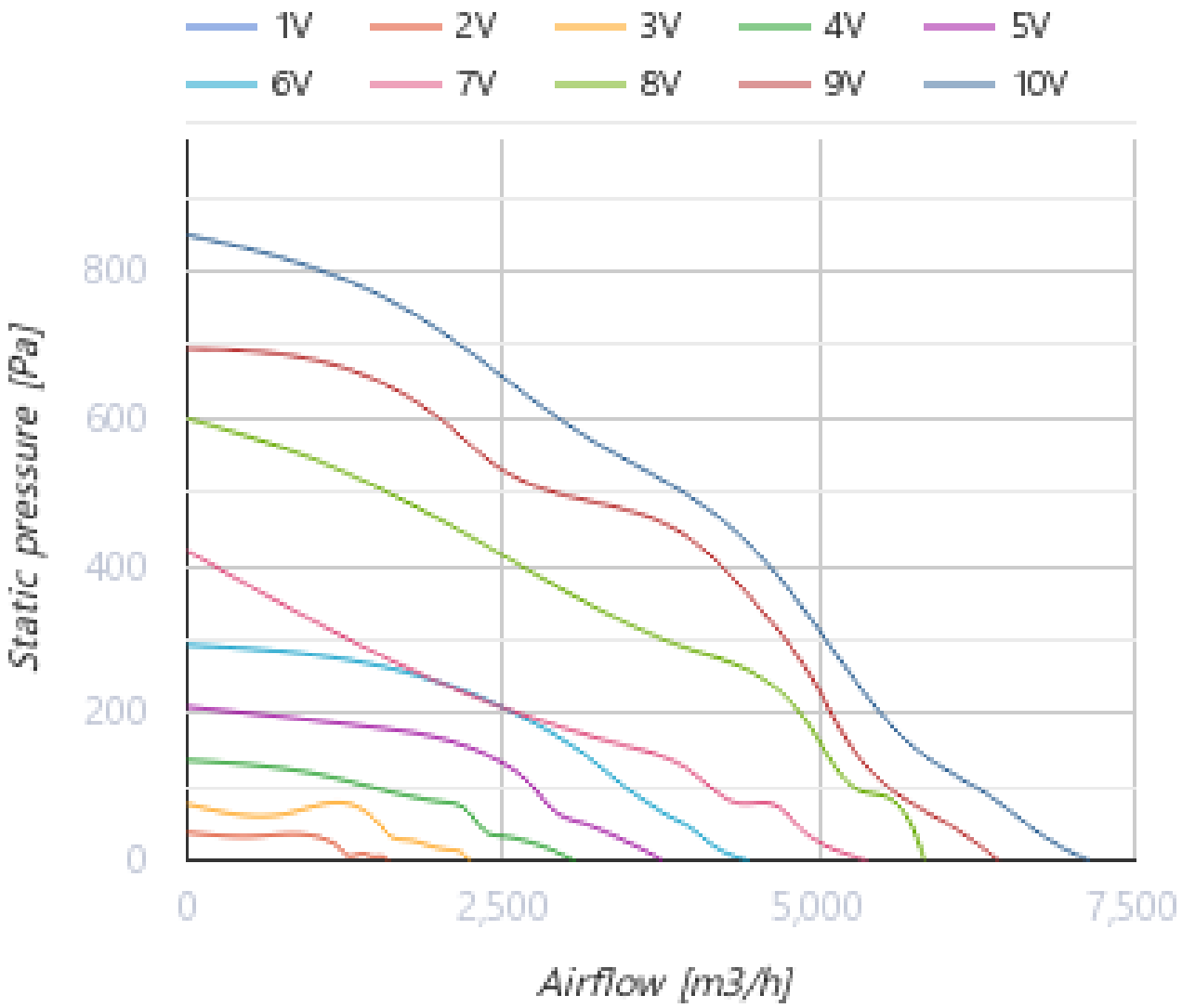
1V
2V
3V
4V
5V
6V
7V
8V
9V
10V
800
600
400
200
0
Static pressure [Pa]
0
2,500
5,000
7,500
Airflow [m3/h]

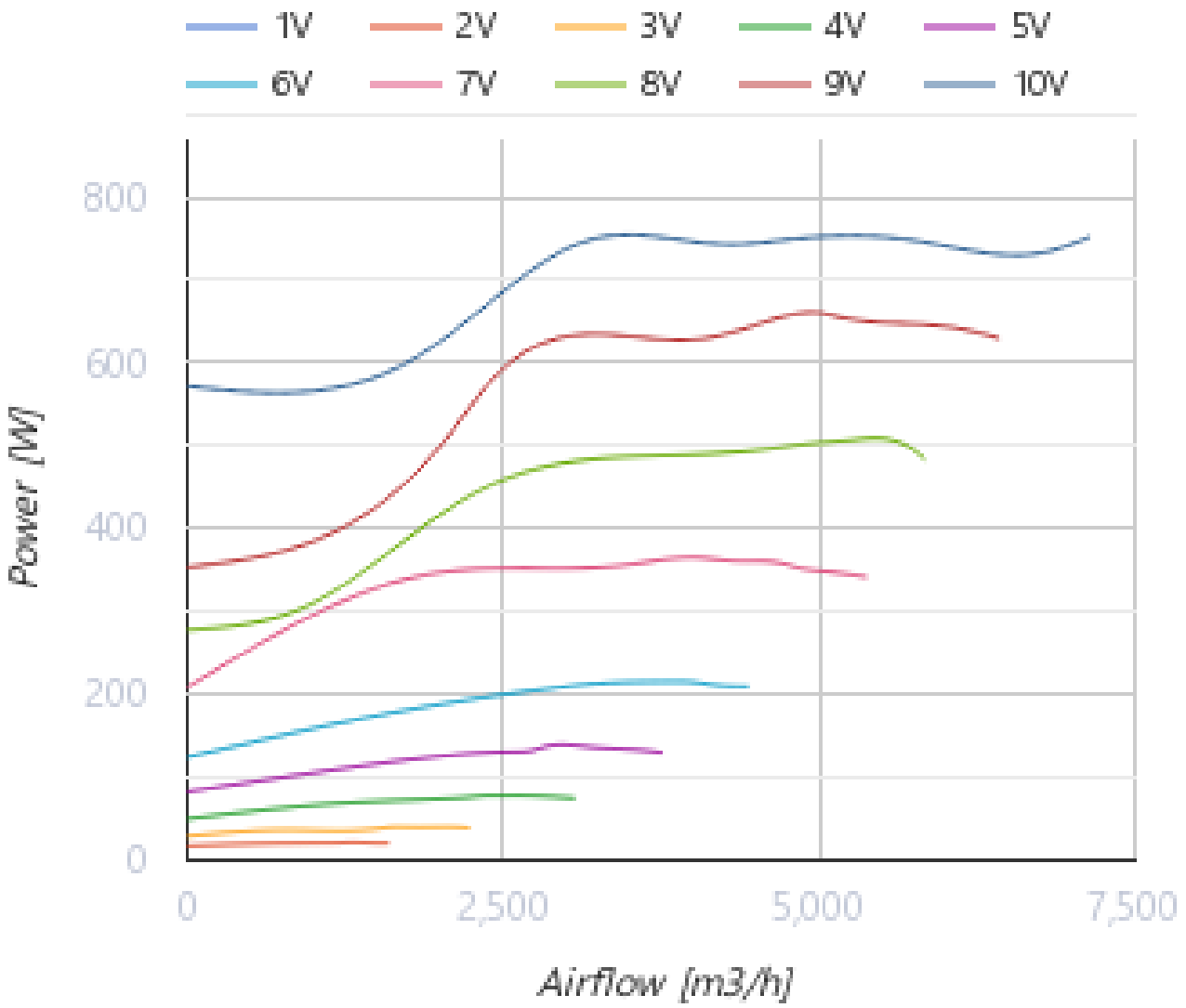

Dimensions

ØD	B	B1	B2	H	L1	L2
499	1049	800	1146	660	1079	998

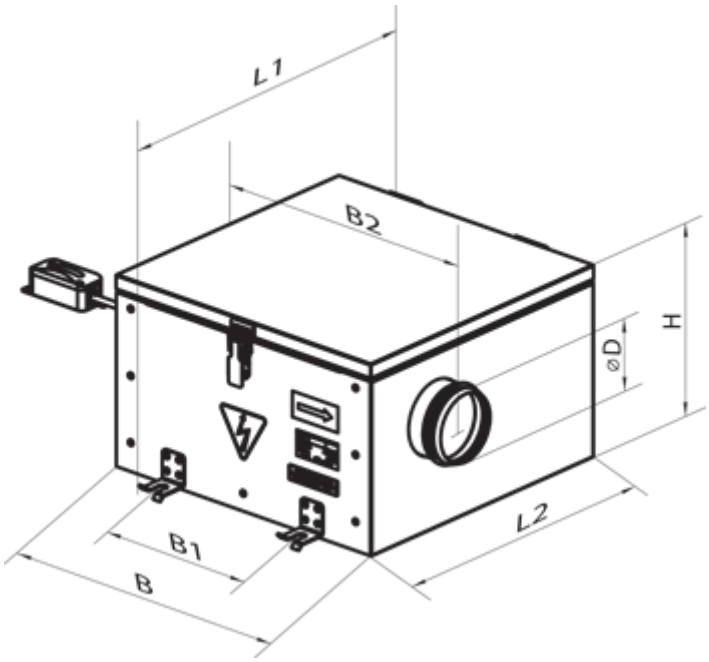

Accessories

For round ducts

Name	Photo	Description
KR 500		Air dampers for controlling air flow in round air ducts

Speed controllers

Name	Photo	Description
R-1/010		Speed controller for EC motors

Ecodesign

Trademark	Vents
Model	KSB 500 K2 EC R1
Type of drive installed	Integrated VSD
Type of heat recovery system	None
Nominal external pressure (Pa)	450
Maximum external leakage rates (%)	2.7
Static efficiency (%)	74.2
Sound power level (dB(A))	76
Effective electric power input (kW)	0.743
Declared typology	NRVU UVU