# KSB 450 K2 EC

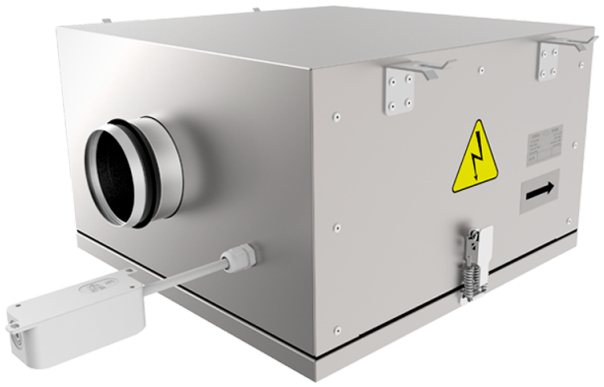

Centrifugal inline fans with backward curved blades in cases with improved sound insulation properties with EC-motors

- Sound pressure level LpA at 3 m: 54
- Sound-insulated casing
- Impeller type: Centrifugal impeller with backward curved blades
- Casing material: Aluzinc
- Installation in any position

| | Unit of measurement | KSB 450 K2 EC |
|---|---|---|
| Connected air duct size | mm | 450 |
| Phases | - | 3 |
| Minimum supply voltage | V | 400 |
| Maximum supply voltage | V | 400 |
| Power supply frequency | Hz | 50/60 |
| Rated power | W | 1200 |
| Unit current | A | 1.95 |
| Maximum airflow | m³/h | 5620 |
| Rotation speed at 50hz | - | 2580 |
| Sound pressure level LpA at 3 m | dB(A) | 54 |
| Weight | kg | 60 |
| Transported air temperature (max) | °C | 55 |
| Transported air temperature (min) | °C | -25 |
| Ingress protection rating | - | IPX4 |
| Ingress protection rating of the drive | - | IP54 |
| Impeller material | - | Plastic |

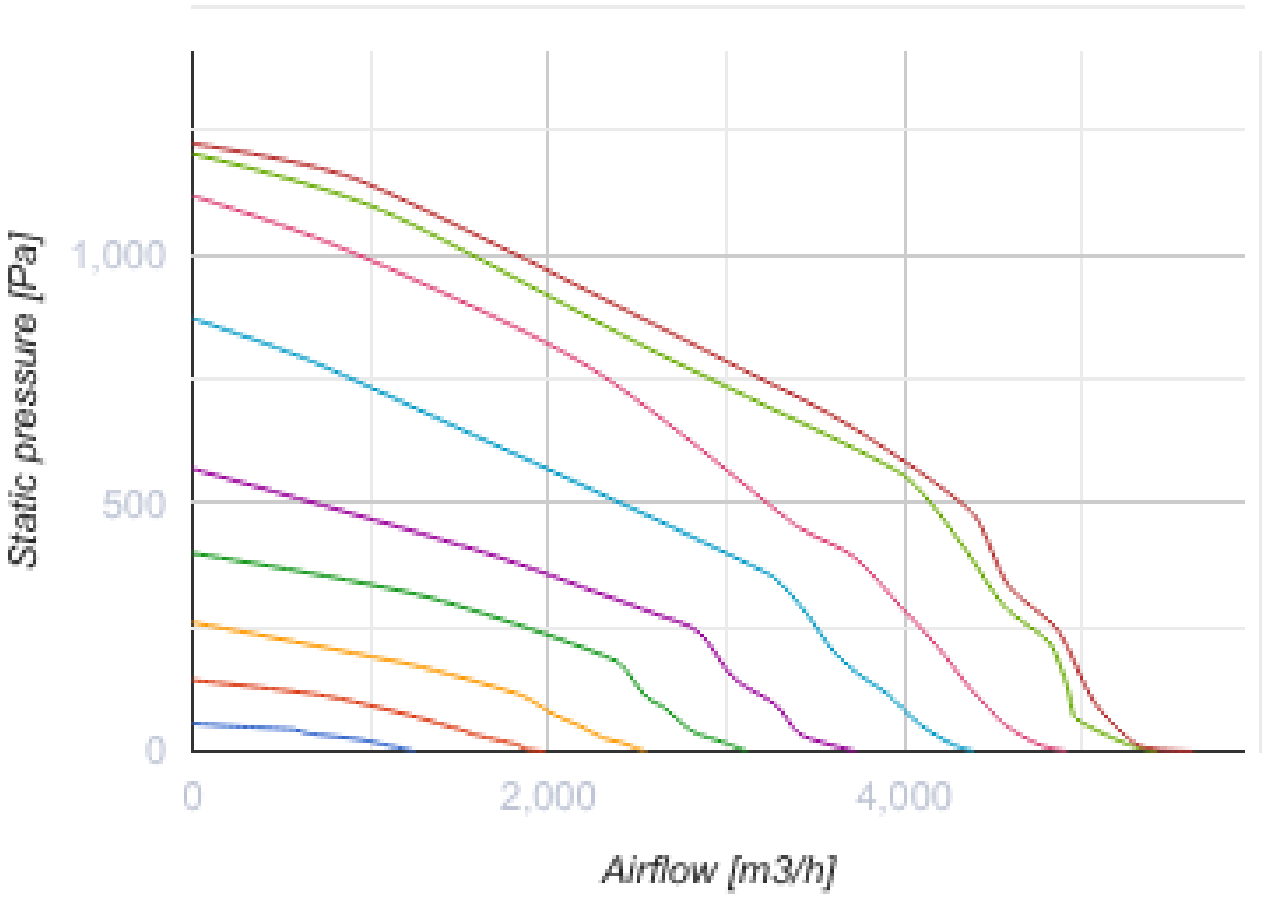
Static pressure [Pa]
1,000
500
0
0
2,000
4,000
Airflow [m3/h]

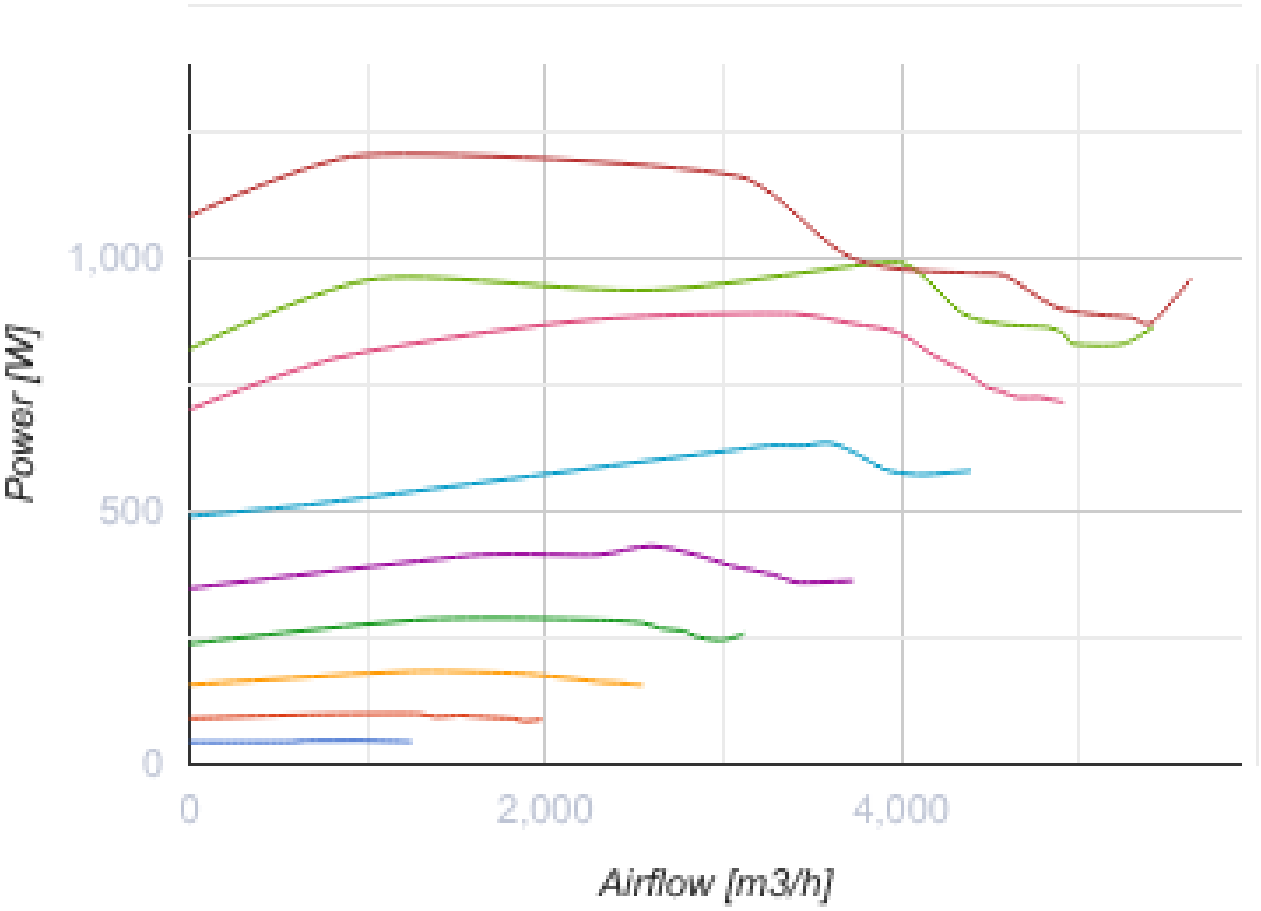


## Dimensions

| ØD | B | B1 | B2 | H | L1 | L2 |
|---|---|---|---|---|---|---|
| 449 | 885 | 670 | 982 | 580 | 886 | 805 |

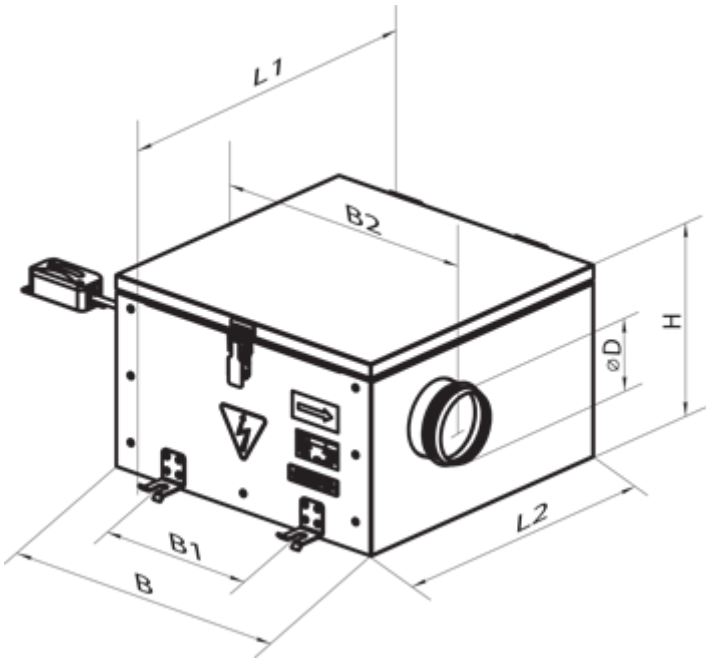


## Accessories

### For round ducts

| Name | Photo | Description |
|---|---|---|
| KR 450 |  | Air dampers for controlling air flow in round air ducts |

### Speed controllers

| Name | Photo | Description |
|---|---|---|
| R-1/010 |  | Speed controller for EC motors |