KSB 400 K2

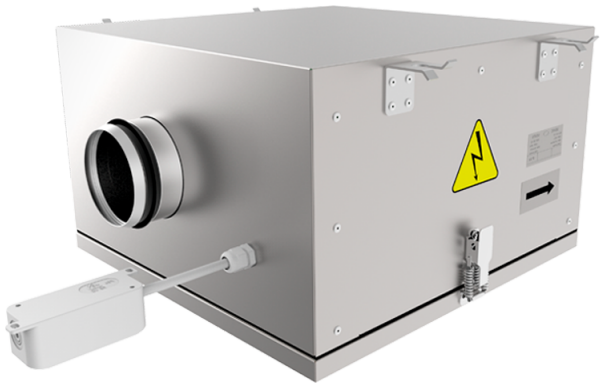

Centrifugal inline fans with backward curved blades in case with improved sound insulation properties

- Sound pressure level LpA at 3 m: 49
- Sound-insulated casing
- Impeller type: Centrifugal impeller with backward curved blades
- Casing material: Galvanized steel
- Installation in any position

	Unit of measurement	KSB 400 K2	
Connected air duct size	mm	400	
Phases	-	1	
Minimum supply voltage	V	230	
Maximum supply voltage	V	230	
Power supply frequency	Hz	50	60
Rated power	W	427	
Unit current	A	1.87	
Maximum airflow	m³/h	3800	
Rotation speed at 50hz	-	1451	
Sound pressure level LpA at 3 m	dB(A)	49	
Weight	kg	78.5	
Transported air temperature (max)	°C	55	
Transported air temperature (min)	°C	-25	
Ingress protection rating	-	IPX4	
Ingress protection rating of the drive	-	IP54	
Impeller material	-	Aluminium	

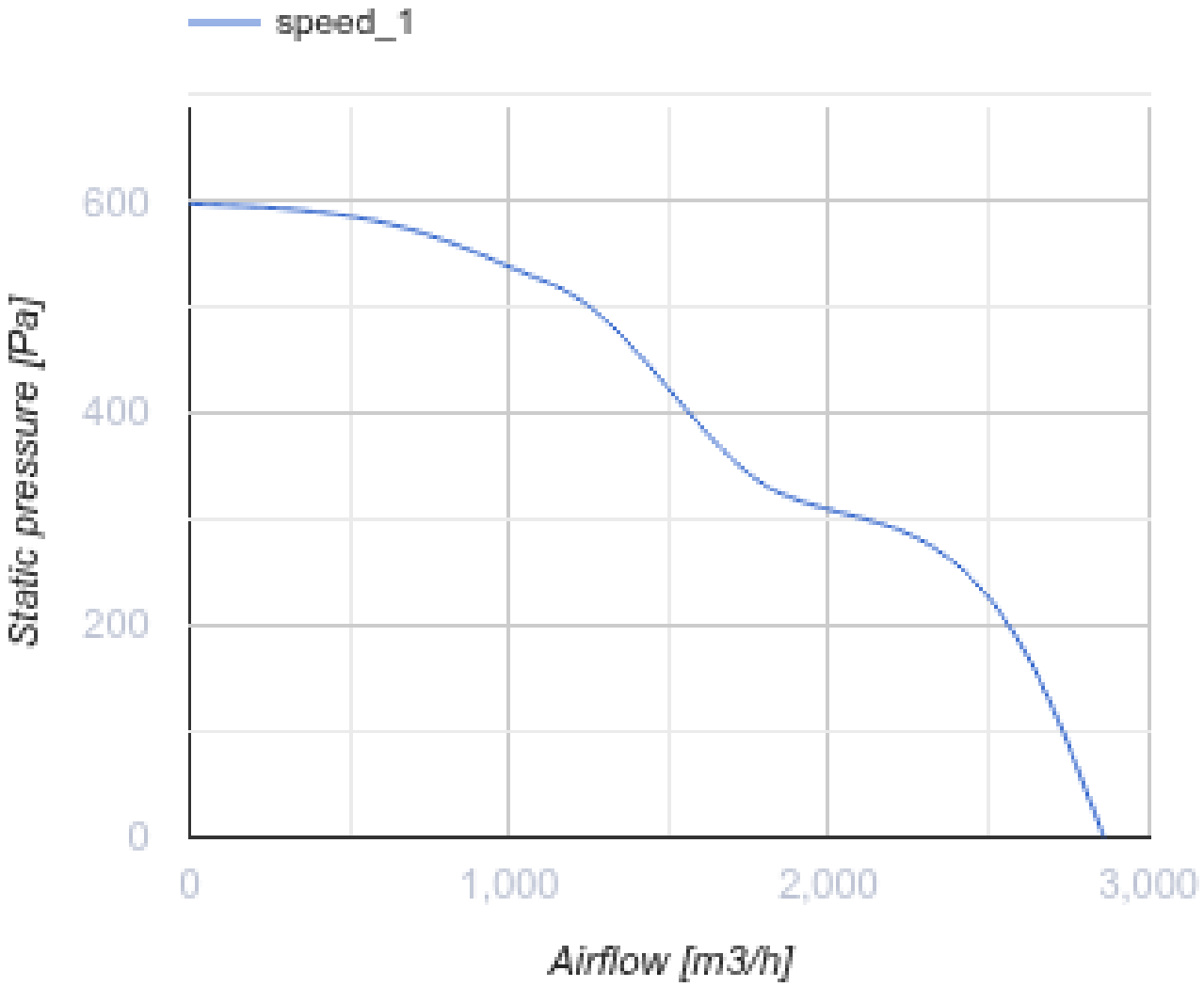
speed_1
600
400
200
0
Static pressure [Pa]
0
1,000
2,000
3,000
Airflow [m3/h]

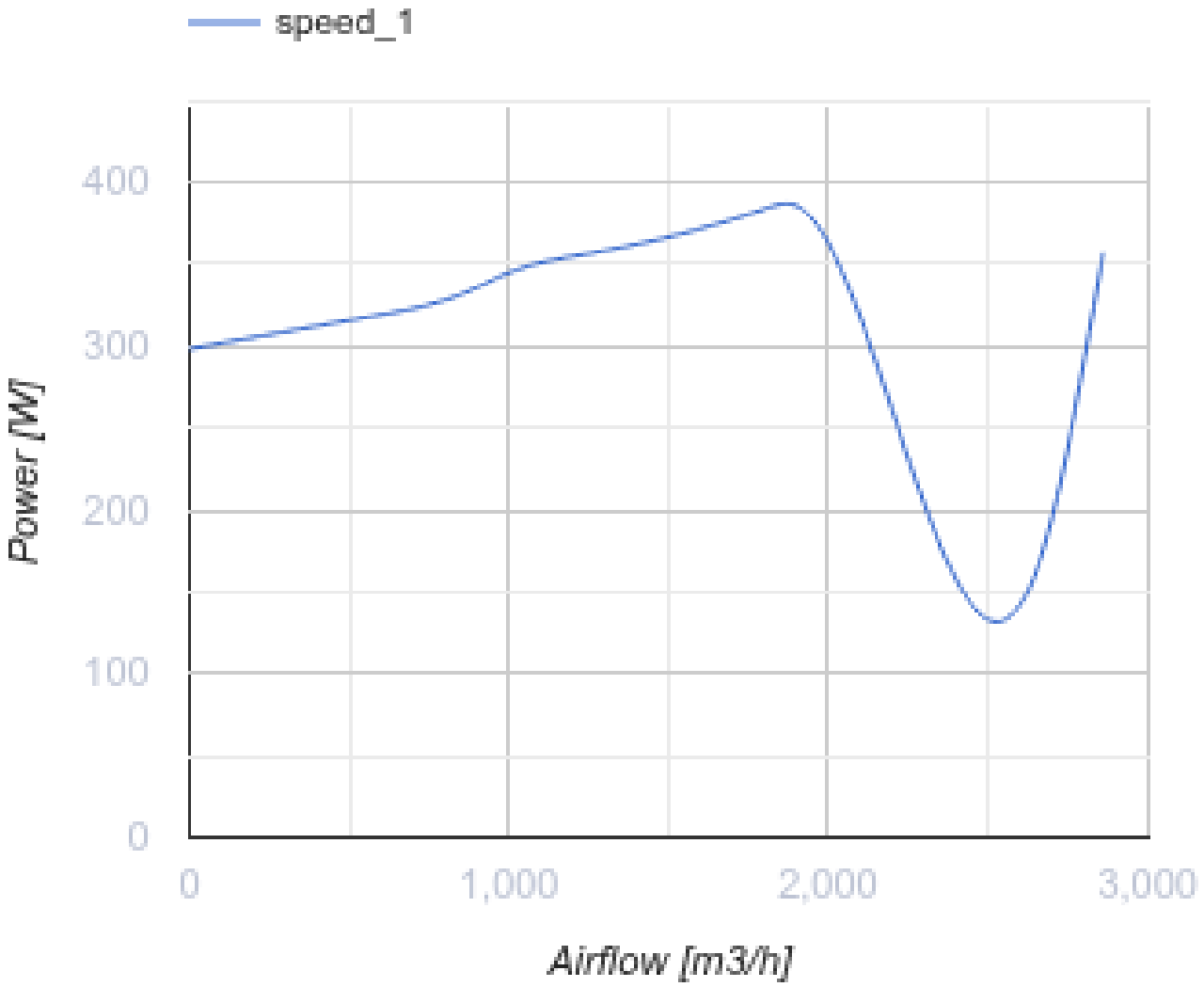

Dimensions

ØD	B	B1	H	L	L1	L2
399	927	737	578	1024	957	876

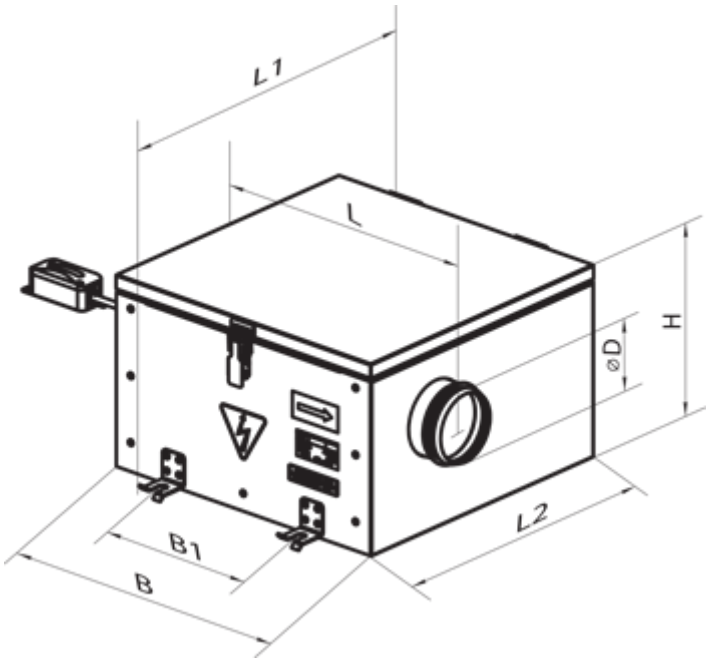

Accessories

For round ducts

Name	Photo	Description
SR 400/900		Silencers made of galvanized steel filled with non-combustible sound-absorbing material
SR 400/1200		Silencers made of galvanized steel filled with non-combustible sound-absorbing material

For round ducts

Name	Photo	Description
KR 400		Air dampers for controlling air flow in round air ducts

Speed controllers

Name	Photo	Description
RSA5E-3,5-T		Speed controllers are applied for air flow control of single phase fans by means of motor step speed control
RSA5E-5,0-T		Speed controllers are applied for air flow control of single phase fans by means of motor step speed control

RSA5E-7,5-T		Speed controllers are applied for air flow control of single phase fans by means of motor step speed control

Ecodesign

Trademark	Vents
Model	KSB 400 K2
Type of drive installed	External MSD or VSD
Type of heat recovery system	None
Nominal external pressure (Pa)	436
Maximum external leakage rates (%)	2.7
Static efficiency (%)	56.3
Sound power level (dB(A))	68
Effective electric power input (kW)	0.398
Declared typology	NRVU UVU