KSB 355 K2

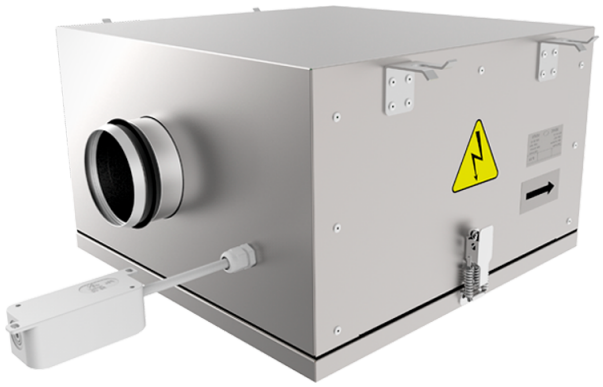

Centrifugal inline fans with backward curved blades in case with improved sound insulation properties

- Sound pressure level LpA at 3 m: 48
- Sound-insulated casing
- Impeller type: Centrifugal impeller with backward curved blades
- Casing material: Galvanized steel
- Installation in any position

	Unit of measurement	KSB 355 K2
Connected air duct size	mm	355
Phases	-	1
Minimum supply voltage	V	230
Maximum supply voltage	V	230
Power supply frequency	Hz	50
Rated power	W	202
Unit current	A	0.89
Maximum airflow	m³/h	2235
Rotation speed at 50hz	-	1330
Sound pressure level LpA at 3 m	dB(A)	48
Weight	kg	58
Transported air temperature (max)	°C	55
Transported air temperature (min)	°C	-25
Ingress protection rating	-	IPX4
Ingress protection rating of the drive	-	IP44
Impeller material	-	Aluminium

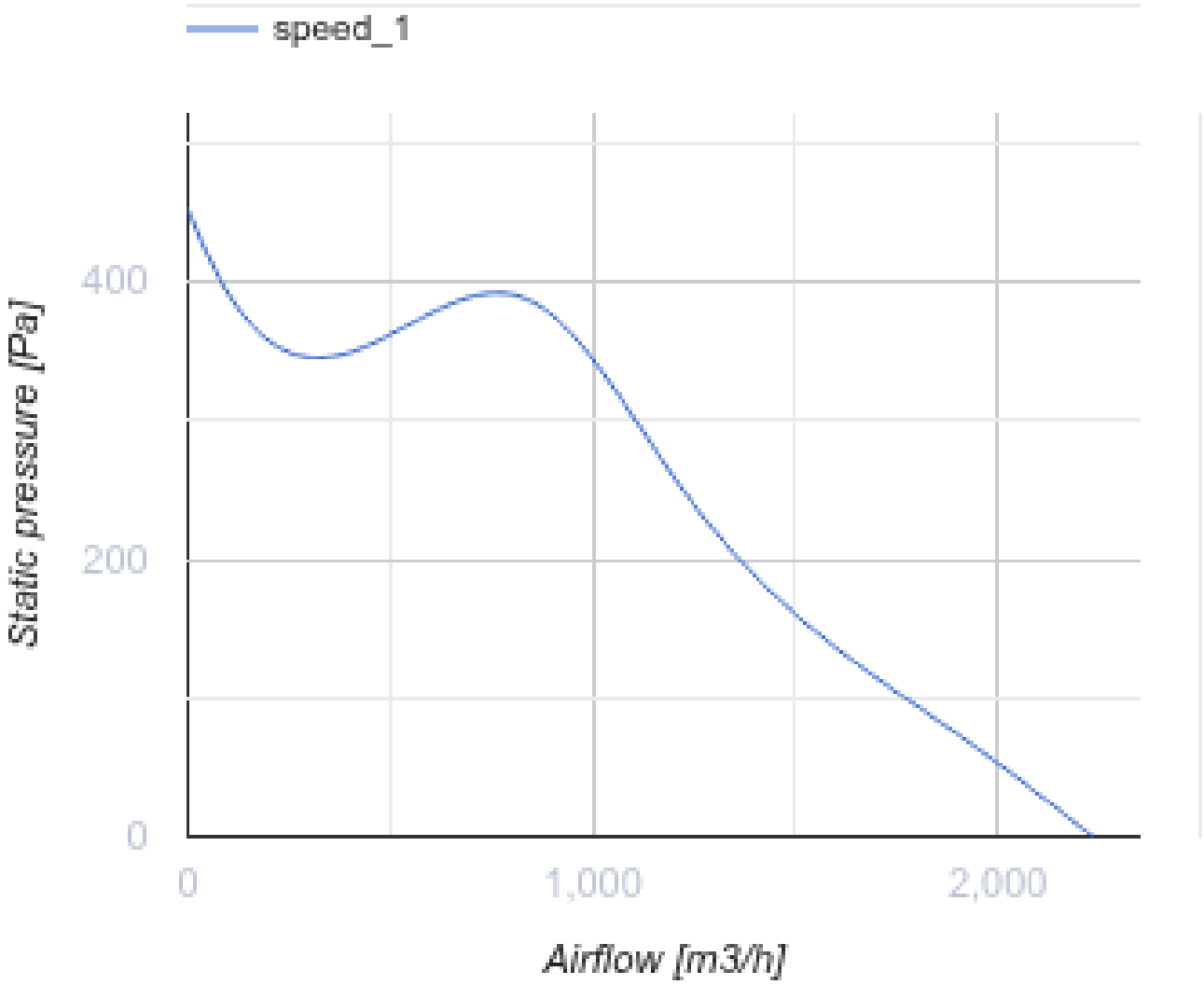
speed_1
Static pressure [Pa]
400
200
0
0
1,000
2,000
Airflow [m3/h]

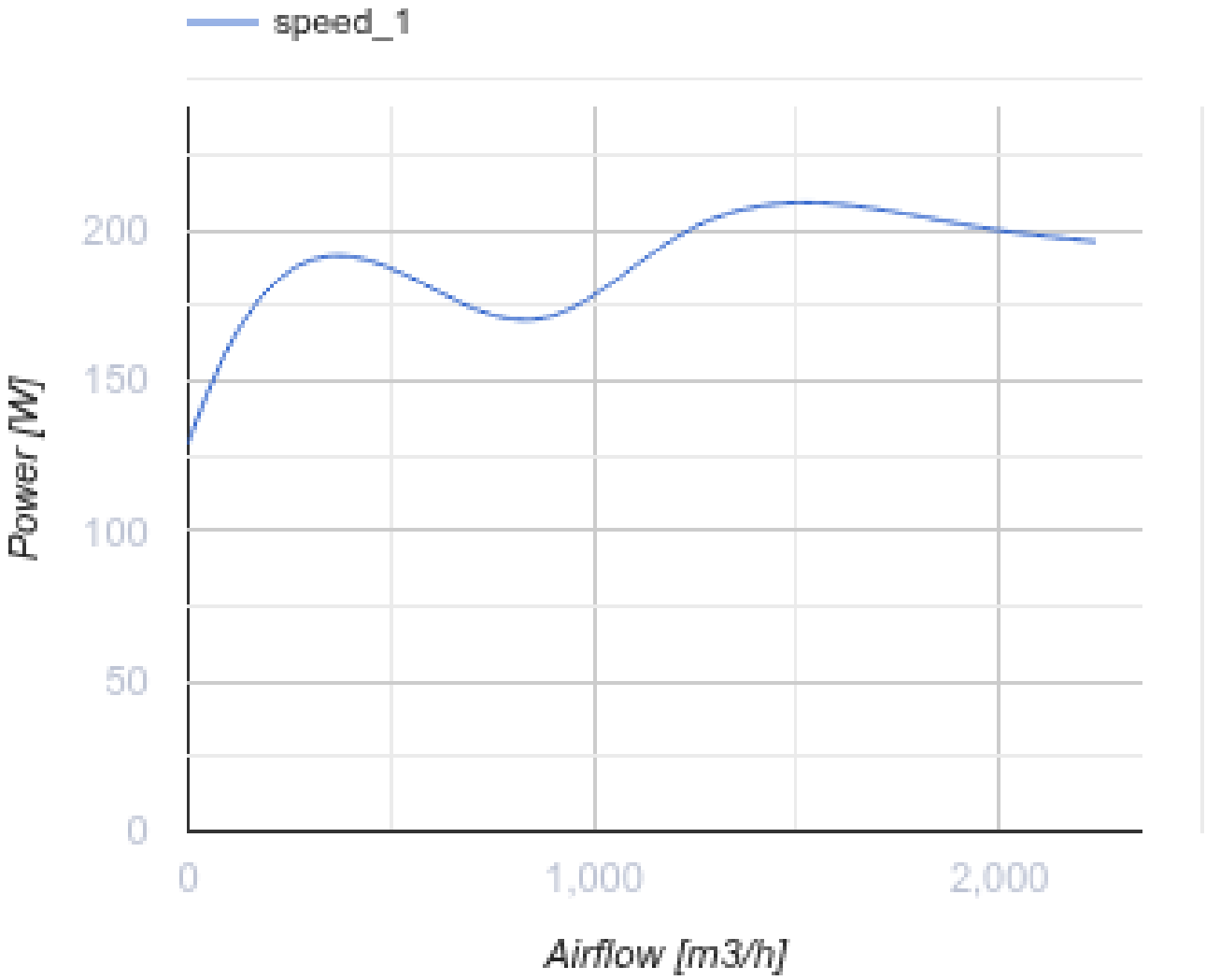

Dimensions

ØD	B	B1	H	L	L1	L2
354	830	641	500	927	885	804

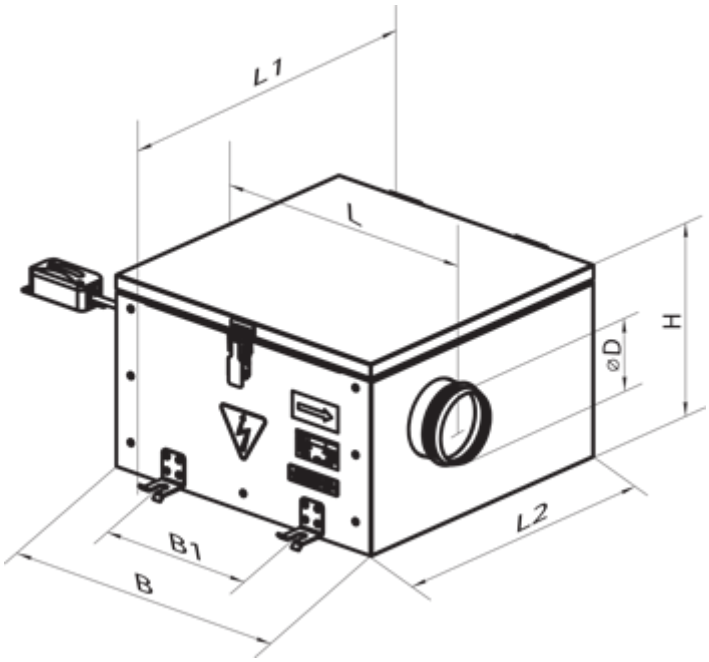

Accessories

For round ducts

Name	Photo	Description
SR 355/600		Silencers made of galvanized steel filled with non-combustible sound-absorbing material
SR 355/900		Silencers made of galvanized steel filled with non-combustible sound-absorbing material
SR 355/1200		Silencers made of galvanized steel filled with non-combustible sound-absorbing material

For round ducts

Name	Photo	Description
KR 355		Air dampers for controlling air flow in round air ducts

Speed controllers

Name	Photo	Description
RSA5E-3,5-T		Speed controllers are applied for air flow control of single phase fans by means of motor step speed control
RSA5E-5,0-T		Speed controllers are applied for air flow control of single phase fans by means of motor step speed control

RSA5E-7,5-T		Speed controllers are applied for air flow control of single phase fans by means of motor step speed control

Ecodesign

Trademark	Vents
Model	KSB 355 K2
Type of drive installed	External MSD or VSD
Type of heat recovery system	None
Nominal external pressure (Pa)	384
Maximum external leakage rates (%)	2.7
Static efficiency (%)	54.9
Declared typology	NRVU UVU
Effective electric power input (kW)	0.171
Sound power level (dB(A))	68