KSB 315



Centrifugal inline fans with backward curved blades in sound-insulated casing

- Sound pressure level LpA at 3 m: 43
- Sound-insulated casing
- Impeller type: Centrifugal impeller with backward curved blades
- Casing material: Galvanized steel
- Installation in any position

	Unit of measurement	KSB 315
Connected air duct size	mm	315
Phases	-	1
Minimum supply voltage	V	220
Maximum supply voltage	V	240
Power supply frequency	Hz	50/60
Rated power	W	322
Unit current	A	1.4
Maximum airflow	m^3/h	2150
Rotation speed at 50hz	-	2670
Sound pressure level LpA at 3 m	dB(A)	43
Weight	kg	15.5
Transported air temperature (max)	°C	45
Transported air temperature (min)	°C	-25
Ingress protection rating	-	IPX4
Impeller material	-	Plastic

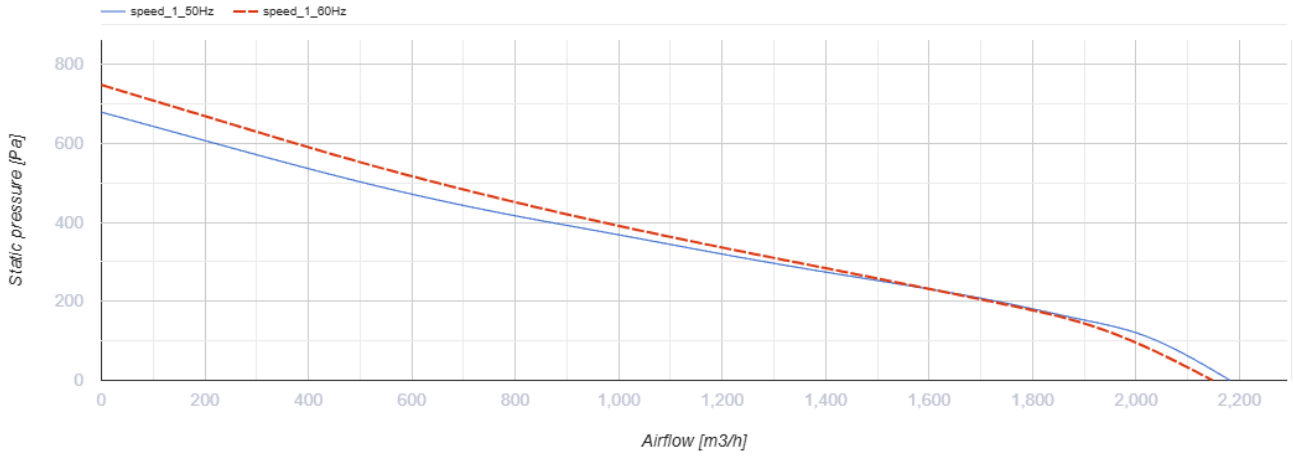

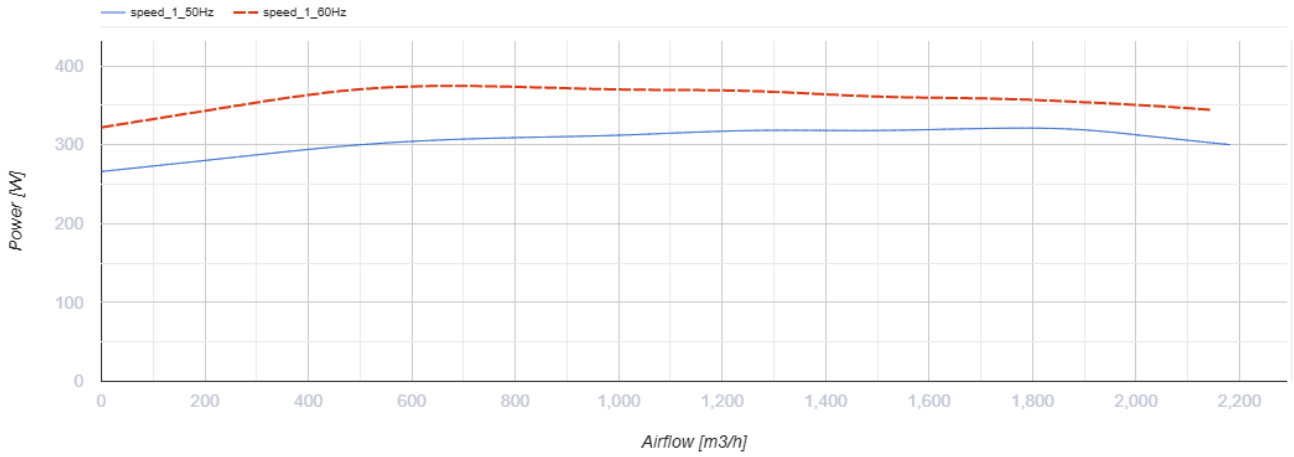

Dimensions

ØD	B	B1	H	L	L1	L2
314	502	438	397	648	566	540

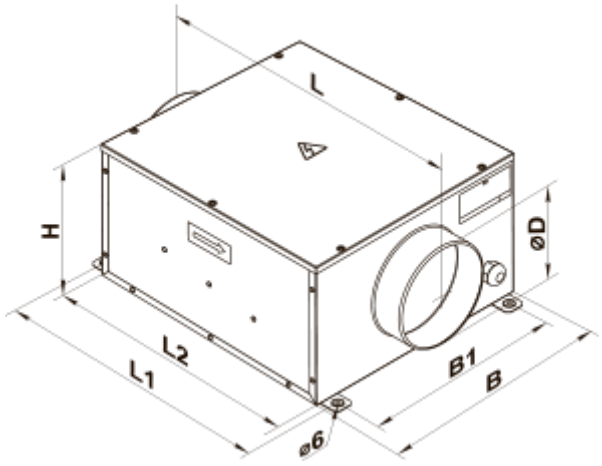

Ecodesign

Trademark	Vents
Model	KSB 315
Type of drive installed	External MSD or VSD
Type of heat recovery system	None
Nominal external pressure (Pa)	291
Maximum external leakage rates (%)	2.7
Static efficiency (%)	34.1
Declared typology	NRVU UVU
Effective electric power input (kW)	0.32
Sound power level (dB(A))	63