KSB 315 K2 S

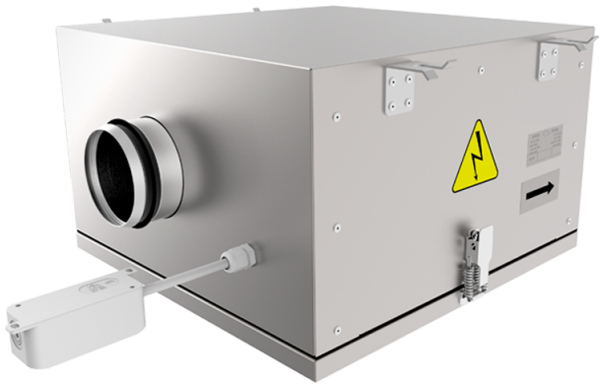

Centrifugal inline fans with backward curved blades in case with improved sound insulation properties

- Sound pressure level LpA at 3 m: 48
- Sound-insulated casing
- Impeller type: Centrifugal impeller with backward curved blades
- Casing material: Galvanized steel
- Installation in any position

	Unit of measurement	KSB 315 K2 S
Connected air duct size	mm	315
Phases	-	3
Minimum supply voltage	V	400
Maximum supply voltage	V	400
Power supply frequency	Hz	50
Rated power	W	654
Unit current	A	1.1
Maximum airflow	m³/h	2710
Rotation speed at 50hz	-	2600
Sound pressure level LpA at 3 m	dB(A)	48
Weight	kg	48
Transported air temperature (max)	°C	55
Transported air temperature (min)	°C	-25
Ingress protection rating	-	IPX4
Ingress protection rating of the drive	-	IP54
Impeller material	-	Galvanized steel

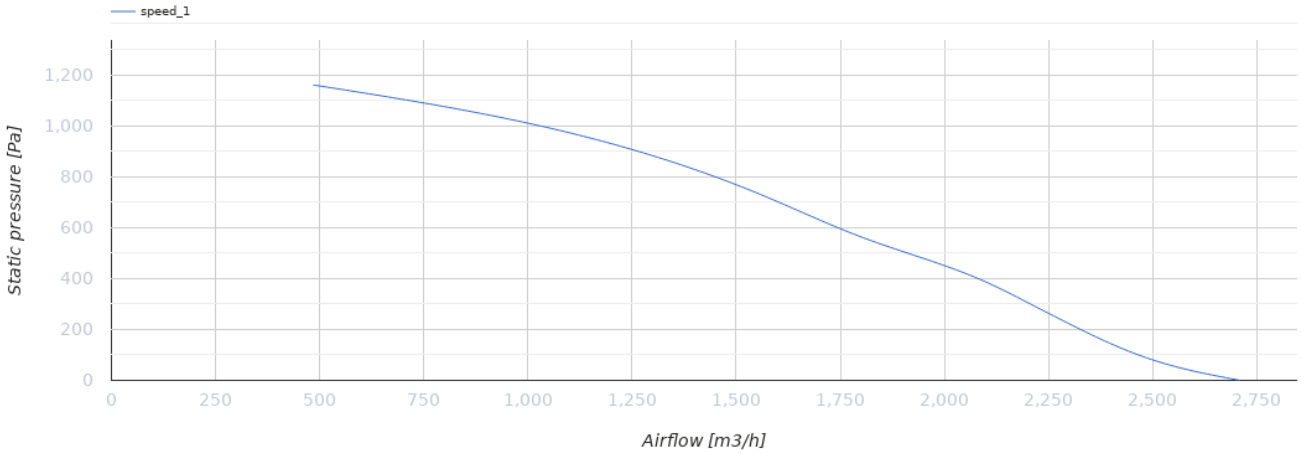

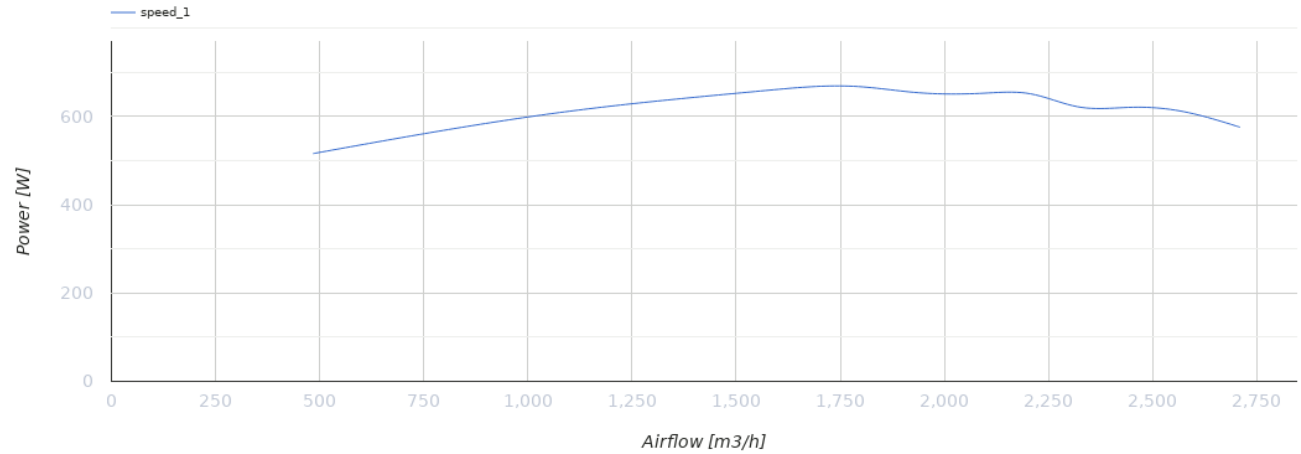

Dimensions

ØD	B	B1	H	L	L1	L2
313	760	560	460	857	747	666

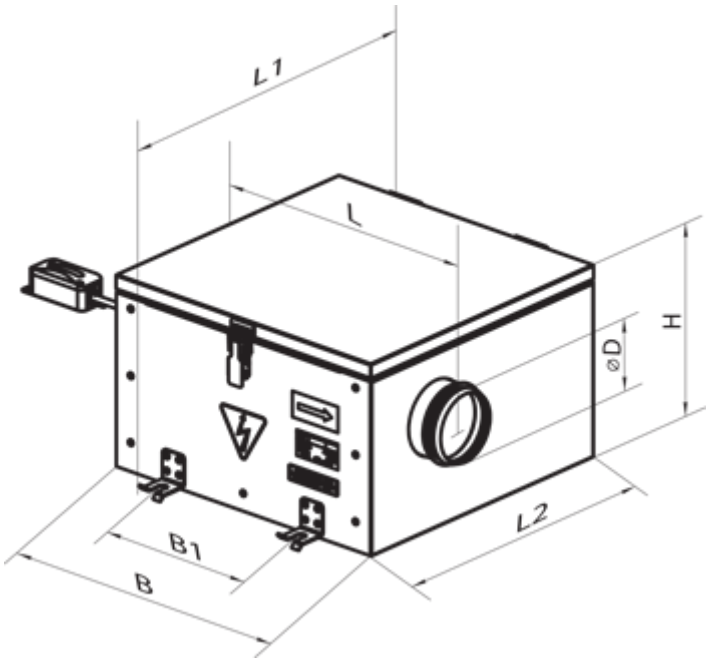
L1
L
H
ØD
L2
B1
B

Ecodesign

Trademark	Vents
Model	KSB 315 K2 S
Type of drive installed	External MSD or VSD
Type of heat recovery system	None
Nominal external pressure (Pa)	972
Maximum external leakage rates (%)	2.7
Static efficiency (%)	49.5
Declared typology	NRVU UVU
Effective electric power input (kW)	0.612
Sound power level (dB(A))	68