KSB 315 K2 EC

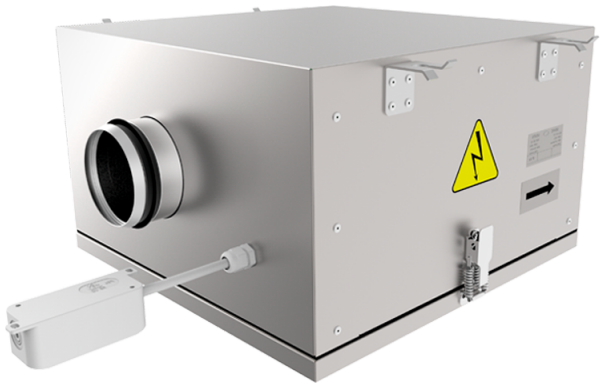

Centrifugal inline fans with backward curved blades in cases with improved sound insulation properties with EC-motors

- Sound pressure level LpA at 3 m: 47
- Sound-insulated casing
- Impeller type: Centrifugal impeller with backward curved blades
- Casing material: Aluzinc
- Installation in any position

	Unit of measurement	KSB 315 K2 EC
Connected air duct size	mm	315
Phases	-	1
Minimum supply voltage	V	230
Maximum supply voltage	V	230
Power supply frequency	Hz	50/60
Rated power	W	531
Unit current	A	2.32
Maximum airflow	m³/h	3053
Rotation speed at 50hz	-	2360
Sound pressure level LpA at 3 m	dB(A)	47
Weight	kg	47
Transported air temperature (max)	°C	55
Transported air temperature (min)	°C	-25
Ingress protection rating	-	IPX4
Ingress protection rating of the drive	-	IP54
Impeller material	-	Plastic

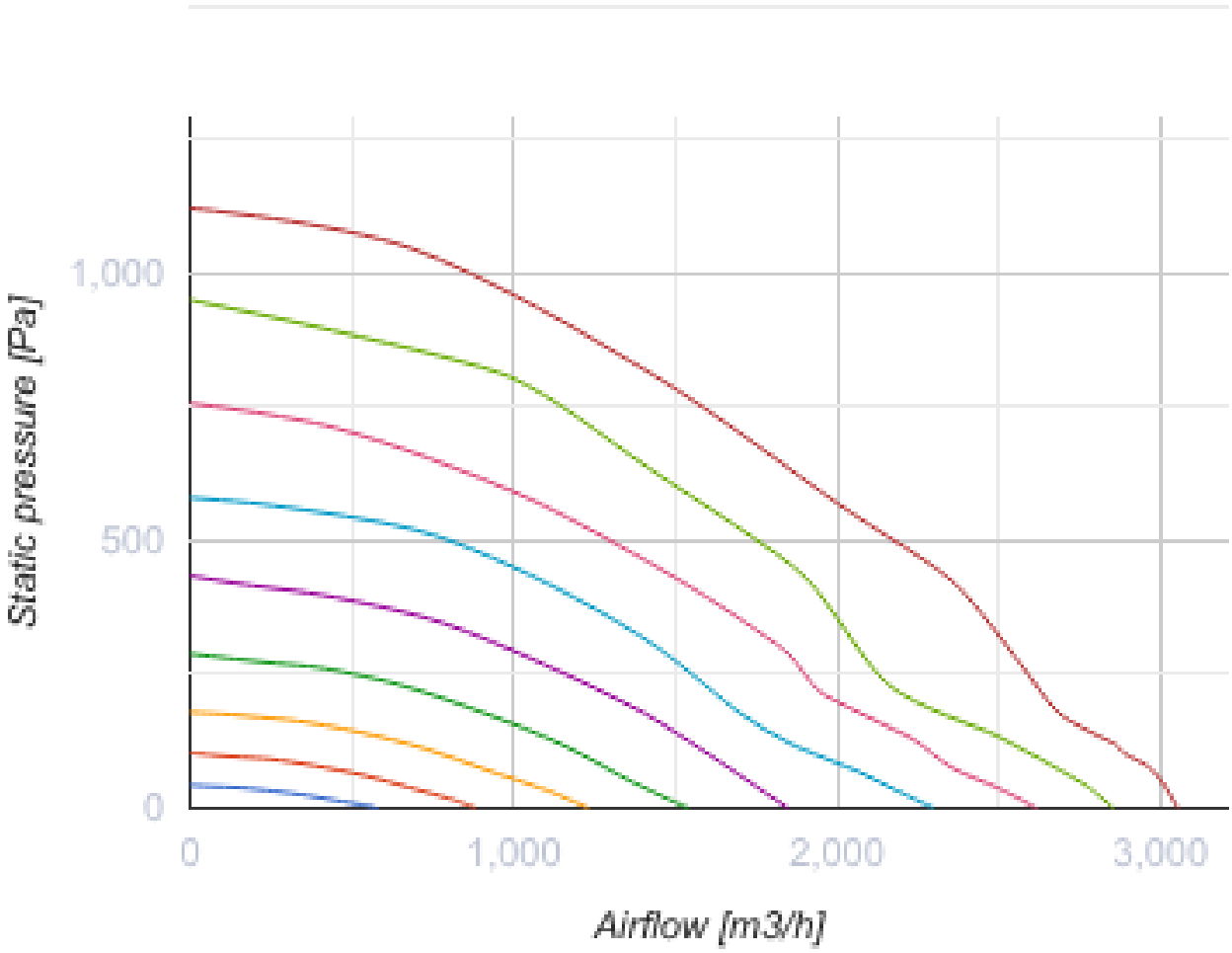
Static pressure [Pa]
1,000
500
0
0
1,000
2,000
3,000
Airflow [m3/h]

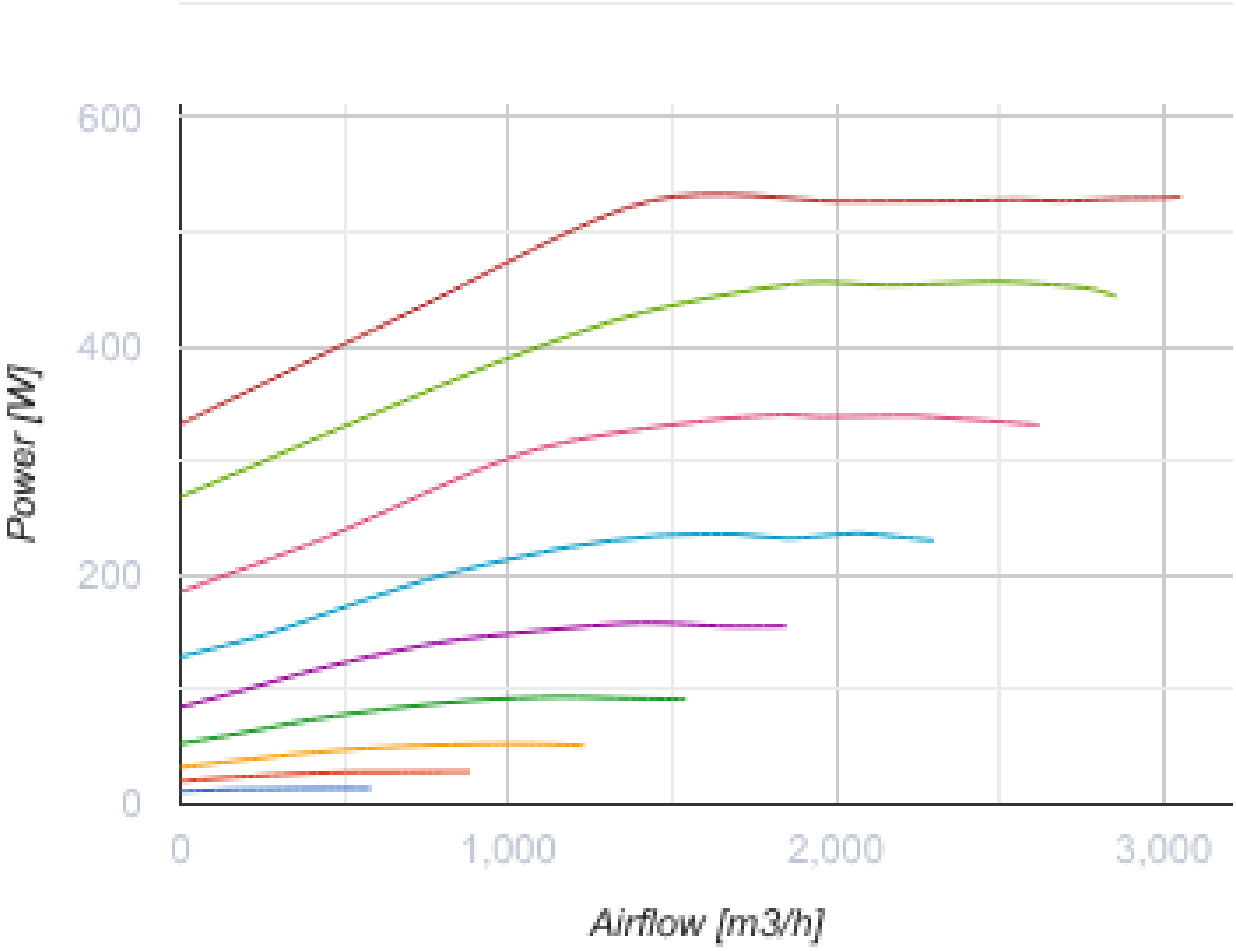

Dimensions

ØD	B	B1	B2	H	L1	L2
313	807	600	904	505	818	737

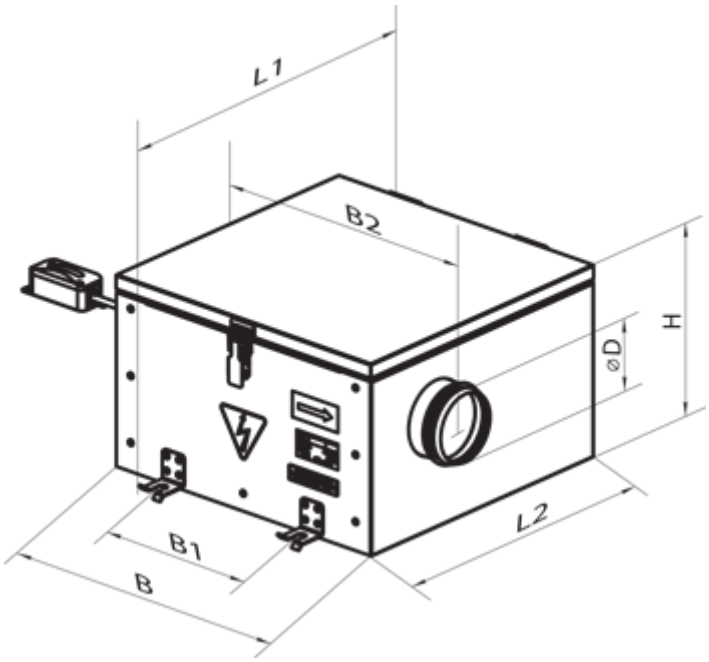

Accessories

For round ducts

Name	Photo	Description
SR 315/600		Silencers made of galvanized steel filled with non-combustible sound-absorbing material
SR 315/900		Silencers made of galvanized steel filled with non-combustible sound-absorbing material
SR 315/1200		Silencers made of galvanized steel filled with non-combustible sound-absorbing material

For round ducts

Name	Photo	Description
FB 315		Round panel air filters
FBK 315-4		Round bag air filters
FBK 315-5		Round bag air filters

FBK 315-7		Round bag air filters

For round ducts

Name	Photo	Description
KOM 315		Backdraught damper with spring-loaded plates for shutting off air flow in round air ducts
KR 315		Air dampers for controlling air flow in round air ducts

Water heaters

Name	Photo	Description
NKV 315-2		Inline water supply air heaters or heater for air handling units with a round cross-section
NKV 315-4		Inline water supply air heaters or heater for air handling units with a round cross-section

Electrical heaters

Name	Photo	Description
NK 315-1,2-1		Round electric inline heaters with round cross-section
NK 315-2,0-1		Round electric inline heaters with round cross-section
NK 315-2,4-1		Round electric inline heaters with round cross-section

Speed controllers

Name	Photo	Description
R-1/010		Speed controller for EC motors