KSB 315 EC



Centrifugal inline fans with backward curved blades in sound-insulated casings with EC-motors

- Sound pressure level LpA at 3 m: 42
- Sound-insulated casing
- Impeller type: Centrifugal impeller with backward curved blades
- Casing material: Galvanized steel
- Installation in any position

	Unit of measurement	KSB 315 EC
Connected air duct size	mm	315
Phases	-	1
Minimum supply voltage	V	230
Maximum supply voltage	V	230
Power supply frequency	Hz	50/60
Rated power	W	164.3
Unit current	A	1.35
Maximum airflow	m^3/h	1260
Rotation speed at 50hz	-	2620
Sound pressure level LpA at 3 m	dB(A)	42
Transported air temperature (max)	°C	60
Transported air temperature (min)	°C	-25
Ingress protection rating	-	IPX4
Ingress protection rating of the drive	-	IP55
Impeller material	-	Plastic

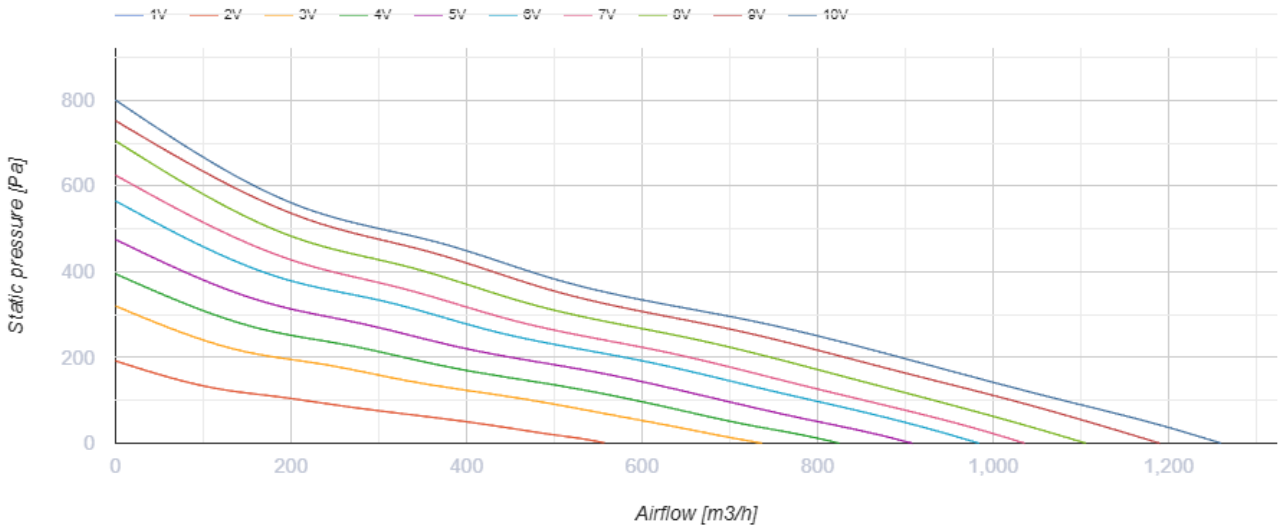

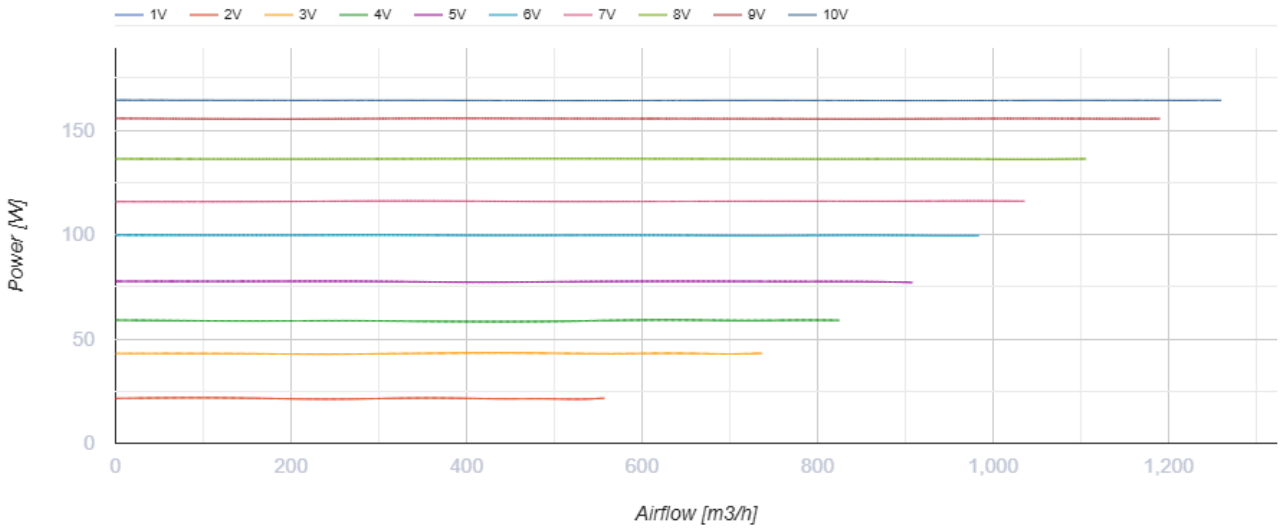

Dimensions

ØD	L	B	H	L1	B1	L2	B2
314	505	545	405	560	650	438	566

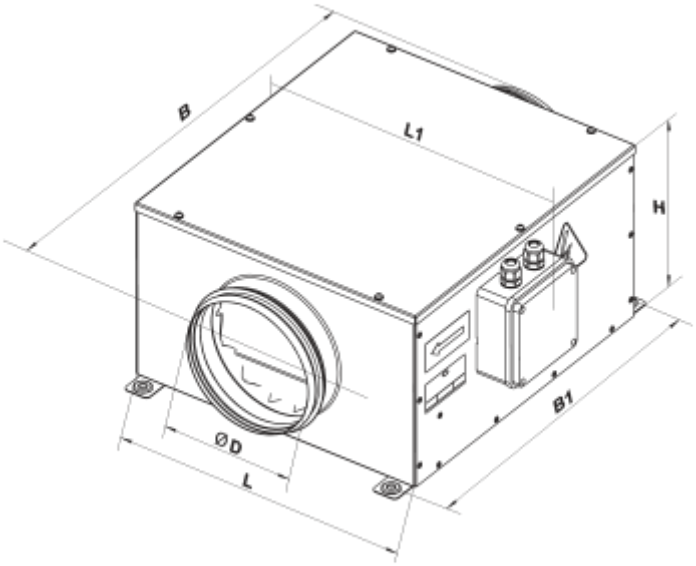
B
L1
H
B1
ØD
L

Ecodesign

Trademark	Vents
Model	KSB 315 EC
Type of drive installed	Integrated VSD
Type of heat recovery system	None
Nominal external pressure (Pa)	285
Maximum external leakage rates (%)	2.7
Static efficiency (%)	40.8
Declared typology	NRVU UVU
Effective electric power input (kW)	0.164
Sound power level (dB(A))	62