KSB 200 K2

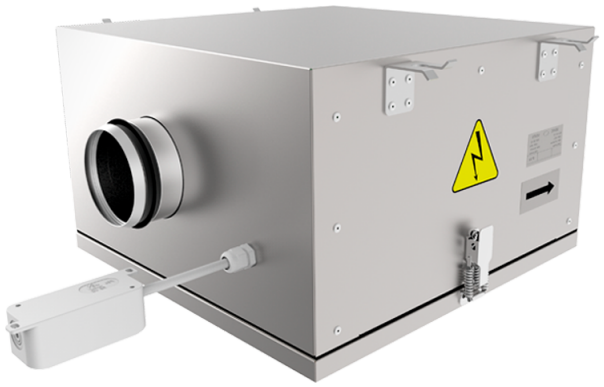

Centrifugal inline fans with backward curved blades in case with improved sound insulation properties

- Sound pressure level LpA at 3 m: 42
- Sound-insulated casing
- Impeller type: Centrifugal impeller with backward curved blades
- Casing material: Galvanized steel
- Installation in any position

	Unit of measurement	KSB 200 K2
Connected air duct size	mm	200
Phases	-	1
Maximum supply voltage	V	230
Minimum supply voltage	V	230
Power supply frequency	Hz	50
Rated power	W	164
Unit current	A	0.71
Maximum airflow	m³/h	770
Rotation speed at 50hz	-	2580
Sound pressure level LpA at 3 m	dB(A)	42
Weight	kg	22.6
Transported air temperature (max)	°C	55
Transported air temperature (min)	°C	-25
Ingress protection rating	-	IPX4
Ingress protection rating of the drive	-	IP44
Impeller material	-	Plastic

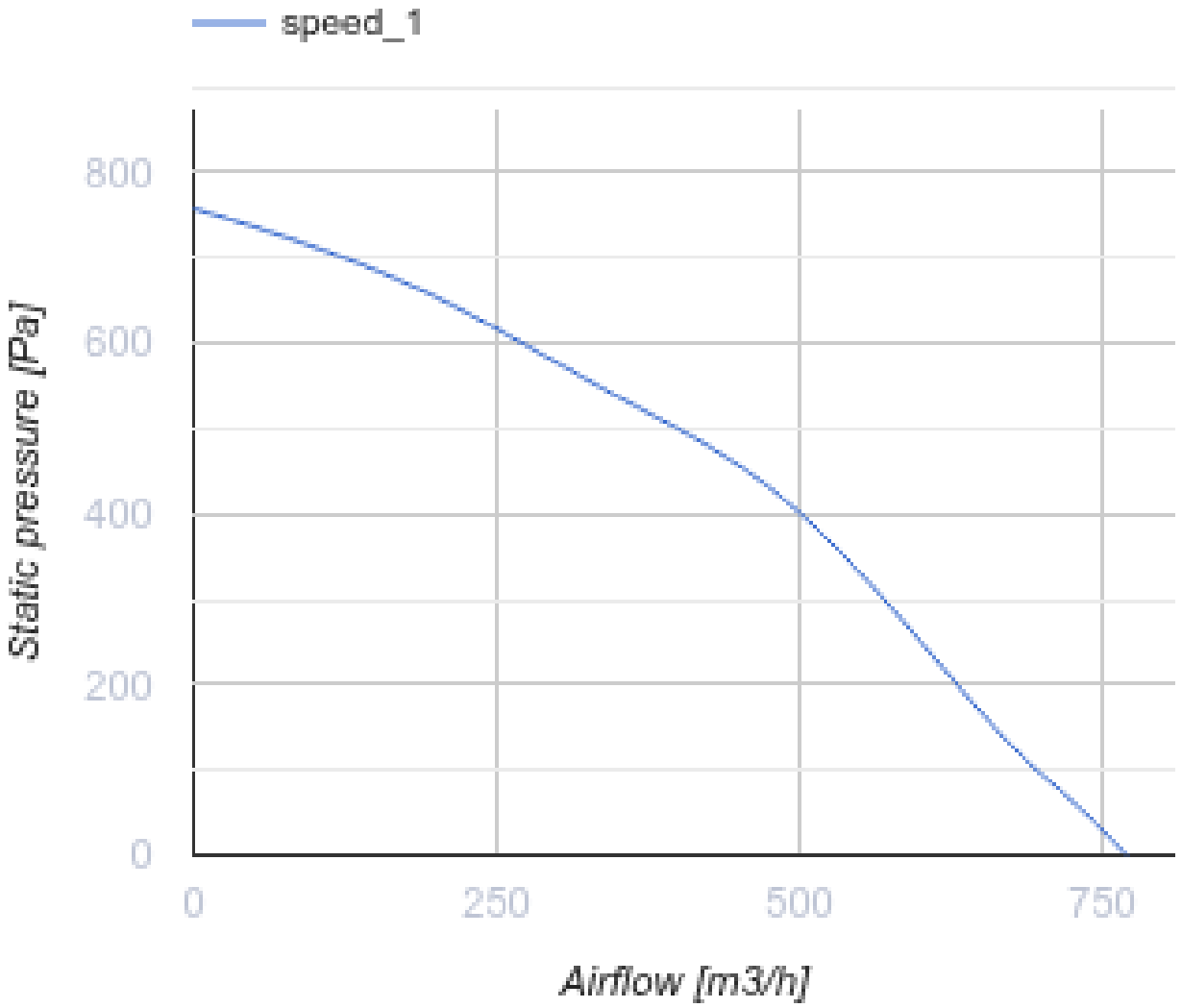
speed_1
800
600
400
200
0
Static pressure [Pa]
0
250
500
750
Airflow [m3/h]

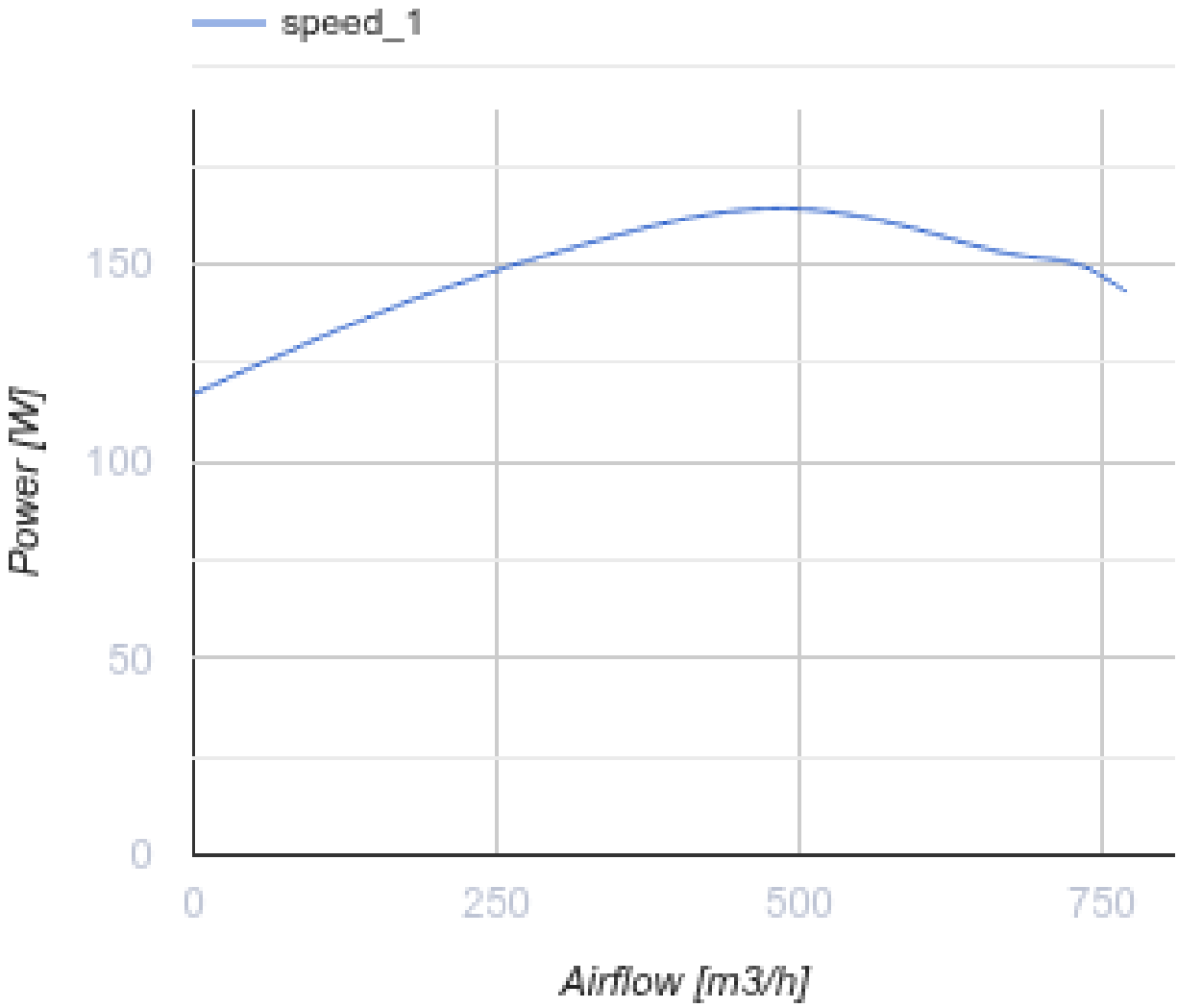

Dimensions

ØD	B	B1	H	L	L1	L2
198	535	357.5	355	632	628	535

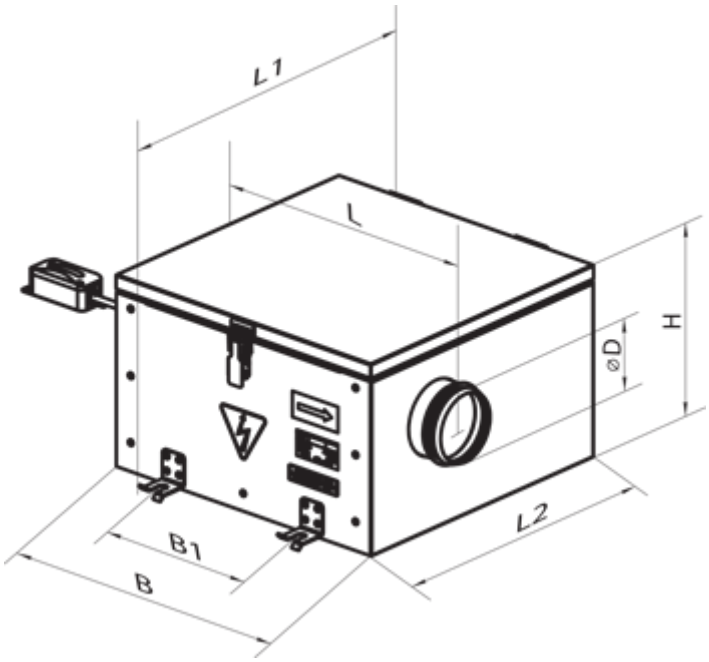

Accessories

For round ducts

Name	Photo	Description
SR 200/600		Silencers made of galvanized steel filled with non-combustible sound-absorbing material
SR 200/900		Silencers made of galvanized steel filled with non-combustible sound-absorbing material
SR 200/1200		Silencers made of galvanized steel filled with non-combustible sound-absorbing material

For round ducts

Name	Photo	Description
FB 200		Round panel air filters
FBK 200-4		Round bag air filters
FBK 200-5		Round bag air filters

FBK 200-7		Round bag air filters

For round ducts

Name	Photo	Description
KOM 200		Backdraught damper with spring-loaded plates for shutting off air flow in round air ducts
KR 200		Air dampers for controlling air flow in round air ducts

Water heaters

Name	Photo	Description
NKV 200-2		Inline water supply air heaters or heater for air handling units with a round cross-section
NKV 200-4		Inline water supply air heaters or heater for air handling units with a round cross-section

Electrical heaters

Name	Photo	Description
NK 200-1,2-1		Round electric inline heaters with round cross-section
NK 200-1,7-1		Round electric inline heaters with round cross-section
NK 200-2,0-1		Round electric inline heaters with round cross-section
NK 200-2,4-1		Round electric inline heaters with round cross-section
NK 200-3,4-1		Round electric inline heaters with round cross-section

Speed controllers

Name	Photo	Description
RSA5E-3,5-T		Speed controllers are applied for air flow control of single phase fans by means of motor step speed control

RSA5E-5,0-T		Speed controllers are applied for air flow control of single phase fans by means of motor step speed control
RSA5E-7,5-T		Speed controllers are applied for air flow control of single phase fans by means of motor step speed control

Ecodesign

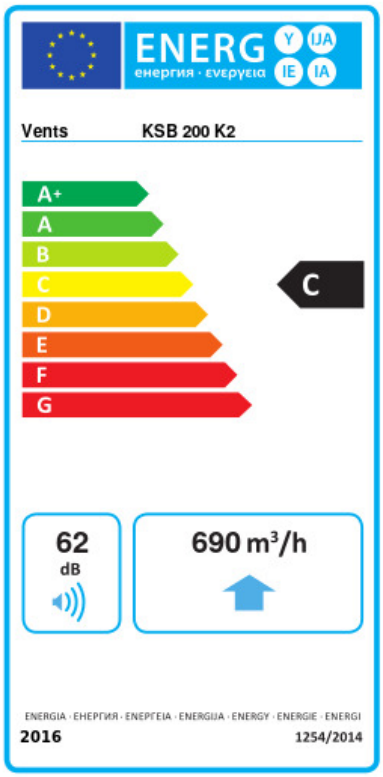

Trademark	Vents					
Model	KSB 200 K2					
Specific energy consumption (SEC) (kWh/(m²/a))	Cold		Average		Warm	
	-50.9	A+	-23.8	C	-8.3	F
Type of ventilation unit	Unidirectional					
Type of drive installed	Variable speed					
Type of heat recovery system	None					
Maximum flow rate (m³/h)	690					
Electric power input (W)	152					
Reference flow rate (m³/s)	0.134					
Reference pressure difference (Pa)	50					
Specific power input (SPI) (W/(m³/h))	0.34					
Control typology	Local demand control					
Maximum external leakage rates (%)	2.7					
Sound power level (dB(A))	62					
Declared typology	RVU UVU					
The annual electricity consumption (AEC) (kWh/a)	Cold		Average		Warm	
	180		180		180	
The annual heating saved (AHS) (kWh/a)	Cold		Average		Warm	
	5536		2830		1280	