KSB 200 K2 EC

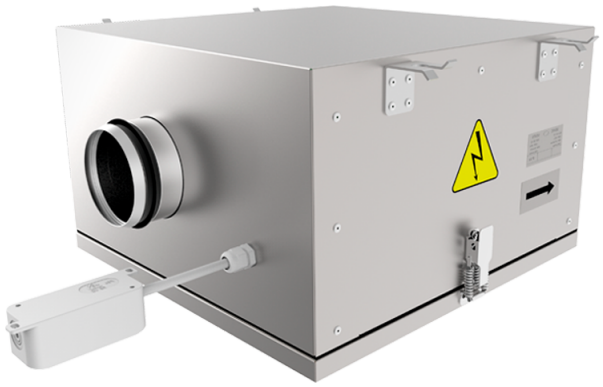

Centrifugal inline fans with backward curved blades in cases with improved sound insulation properties with EC-motors

- Sound pressure level LpA at 3 m: 42
- Sound-insulated casing
- Impeller type: Centrifugal impeller with backward curved blades
- Casing material: Aluzinc
- Installation in any position

	Unit of measurement	KSB 200 K2 EC
Connected air duct size	mm	200
Phases	-	1
Minimum supply voltage	V	230
Maximum supply voltage	V	230
Power supply frequency	Hz	50/60
Rated power	W	111
Unit current	A	0.88
Maximum airflow	m³/h	740
Rotation speed at 50hz	-	2400
Sound pressure level LpA at 3 m	dB(A)	42
Weight	kg	20
Transported air temperature (max)	°C	55
Transported air temperature (min)	°C	-25
Ingress protection rating	-	IPX4
Ingress protection rating of the drive	-	IP55
Impeller material	-	Plastic

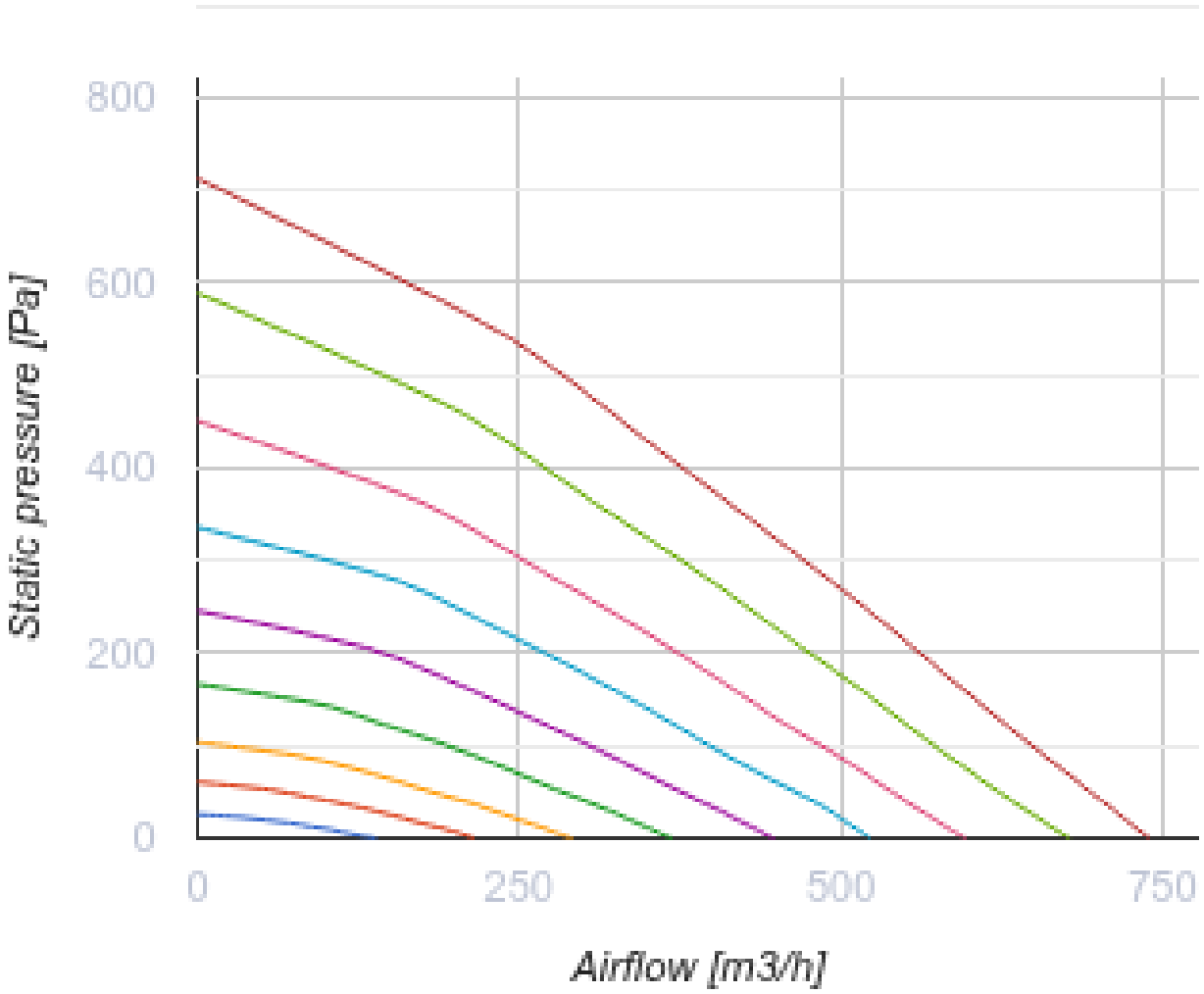
800
600
400
200
0
Static pressure [Pa]
0
250
500
750
Airflow [m3/h]

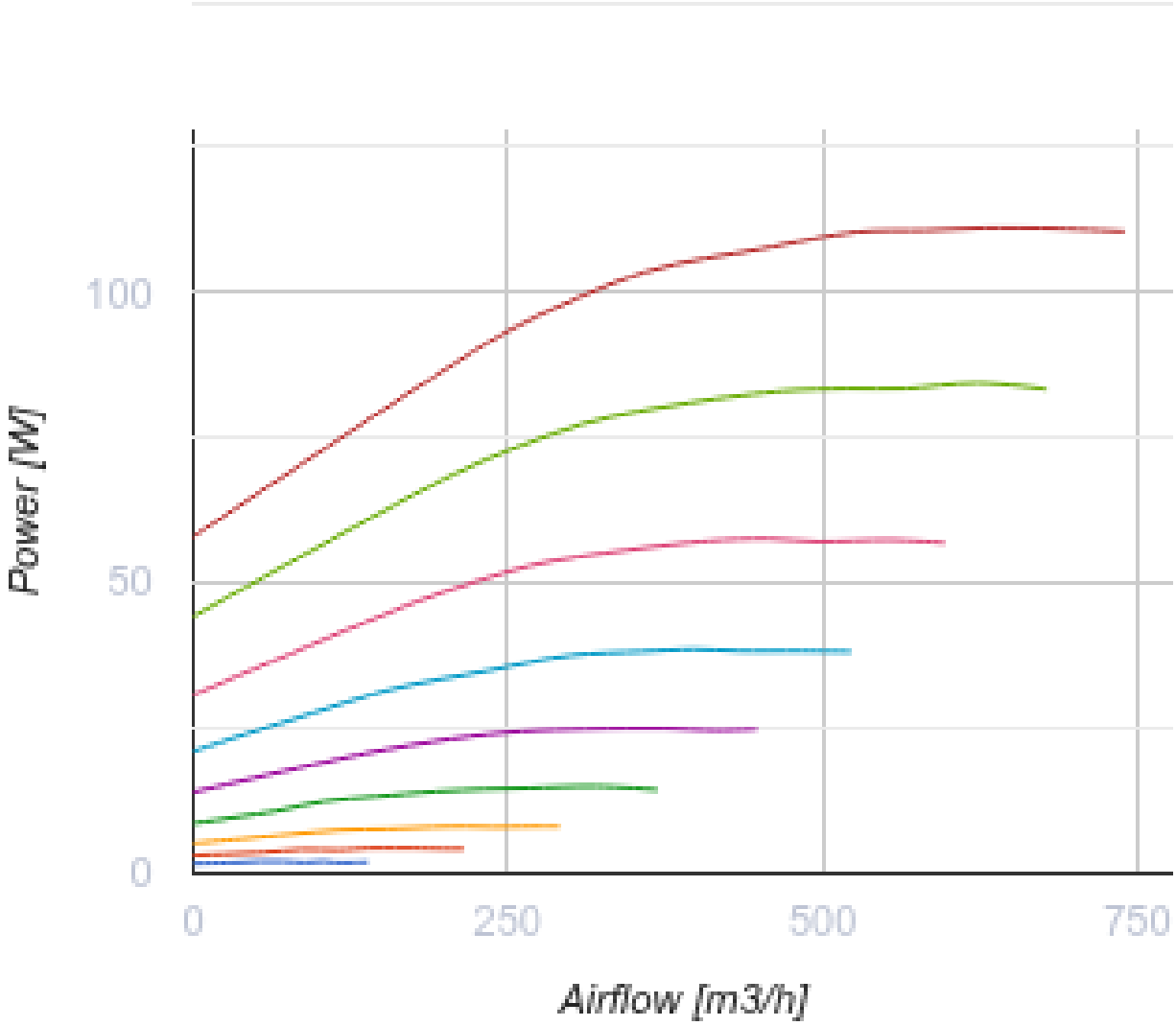

Dimensions

ØD	B	B1	B2	H	L1	L2
198	551	374	648	328	646	553

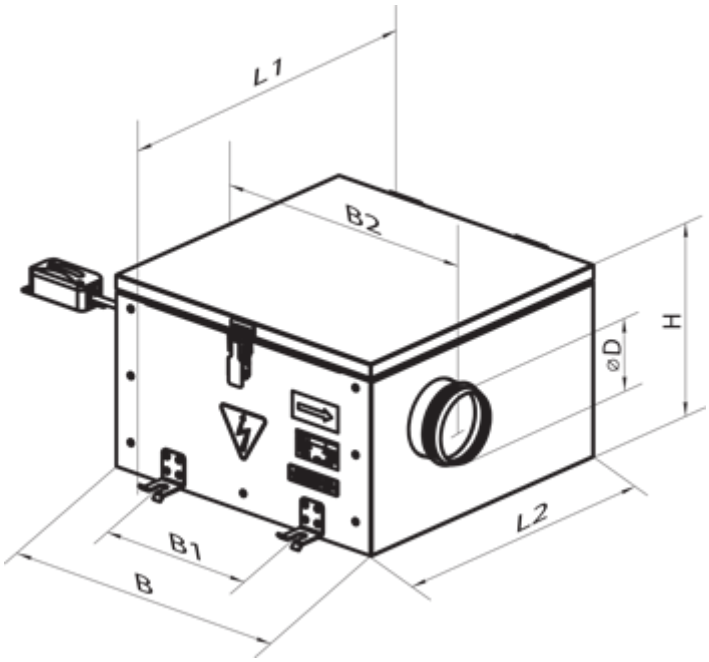

Accessories

For round ducts

Name	Photo	Description
SR 200/600		Silencers made of galvanized steel filled with non-combustible sound-absorbing material
SR 200/900		Silencers made of galvanized steel filled with non-combustible sound-absorbing material
SR 200/1200		Silencers made of galvanized steel filled with non-combustible sound-absorbing material

For round ducts

Name	Photo	Description
FB 200		Round panel air filters
FBK 200-4	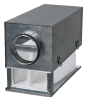	Round bag air filters
FBK 200-5		Round bag air filters

FBK 200-7		Round bag air filters

For round ducts

Name	Photo	Description
KOM 200		Backdraught damper with spring-loaded plates for shutting off air flow in round air ducts
KR 200		Air dampers for controlling air flow in round air ducts

Water heaters

Name	Photo	Description
NKV 200-2		Inline water supply air heaters or heater for air handling units with a round cross-section
NKV 200-4		Inline water supply air heaters or heater for air handling units with a round cross-section

Electrical heaters

Name	Photo	Description
NK 200-1,2-1		Round electric inline heaters with round cross-section
NK 200-1,7-1		Round electric inline heaters with round cross-section
NK 200-2,0-1		Round electric inline heaters with round cross-section
NK 200-2,4-1		Round electric inline heaters with round cross-section
NK 200-3,4-1		Round electric inline heaters with round cross-section

Speed controllers

Name	Photo	Description

R-1/010		Speed controller for EC motors