KSB 160 K2

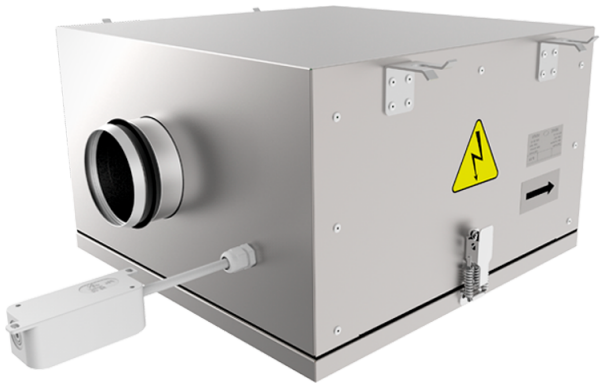

Centrifugal inline fans with backward curved blades in case with improved sound insulation properties

- Sound pressure level LpA at 3 m: 38
- Sound-insulated casing
- Impeller type: Centrifugal impeller with backward curved blades
- Casing material: Galvanized steel
- Installation in any position

	Unit of measurement	KSB 160 K2
Connected air duct size	mm	160
Phases	-	1
Maximum supply voltage	V	230
Minimum supply voltage	V	230
Power supply frequency	Hz	50
Rated power	W	86
Unit current	A	0.38
Maximum airflow	m³/h	500
Rotation speed at 50hz	-	2670
Sound pressure level LpA at 3 m	dB(A)	38
Weight	kg	17
Transported air temperature (max)	°C	55
Transported air temperature (min)	°C	-25
Ingress protection rating	-	IPX4
Ingress protection rating of the drive	-	IP44
Impeller material	-	Plastic

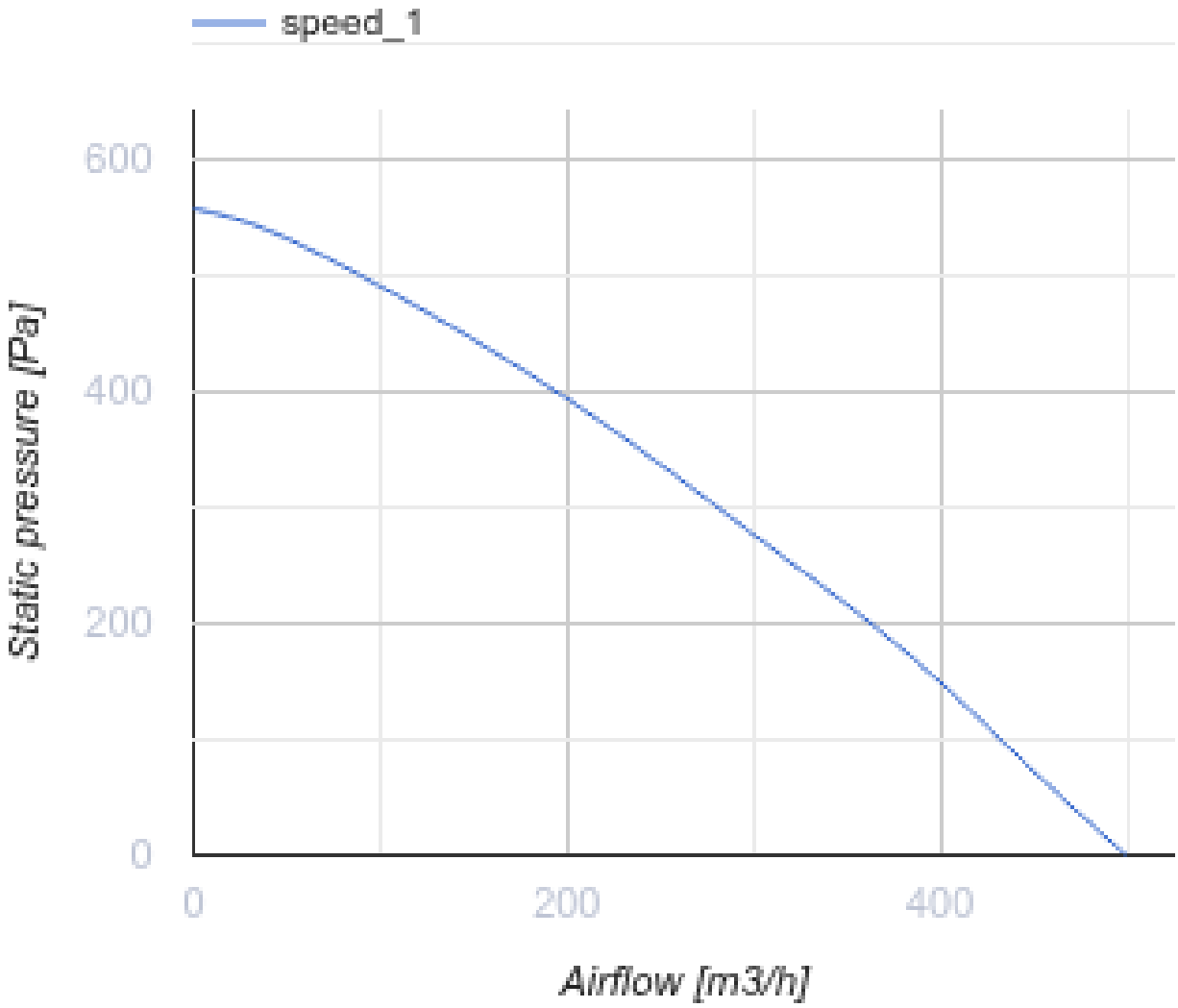
speed_1
600
400
200
0
Static pressure [Pa]
0
200
400
Airflow [m3/h]

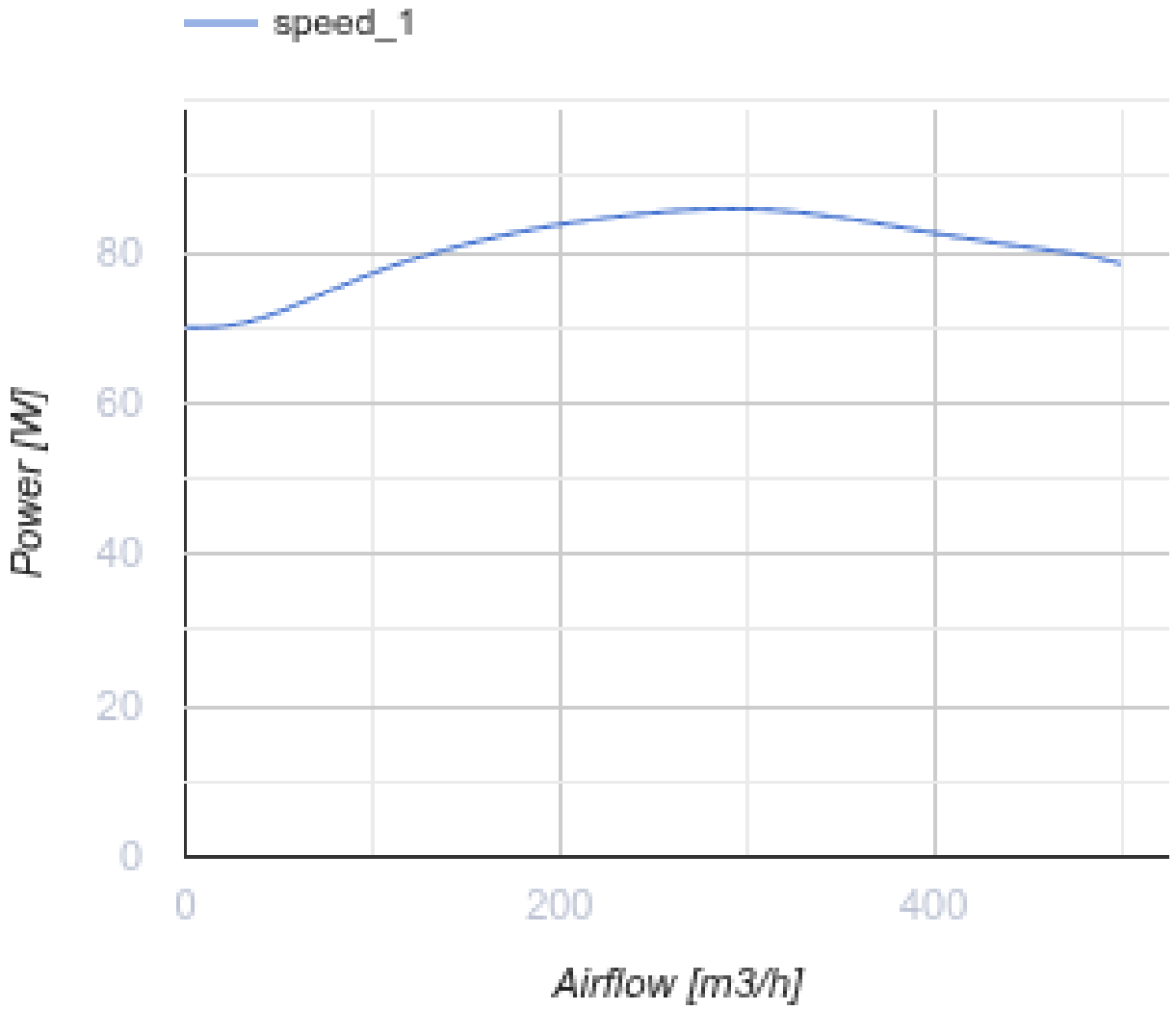

Dimensions

ØD	B	B1	H	L	L1	L2
159	470	278	282	566	586	493

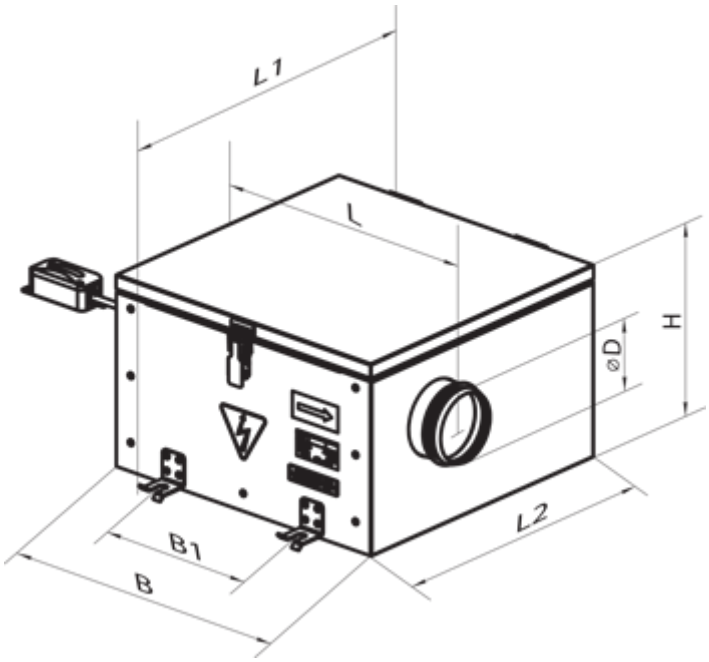

Accessories

For round ducts

Name	Photo	Description
SR 160/600		Silencers made of galvanized steel filled with non-combustible sound-absorbing material
SR 160/900		Silencers made of galvanized steel filled with non-combustible sound-absorbing material
SR 160/1200		Silencers made of galvanized steel filled with non-combustible sound-absorbing material

For round ducts

Name	Photo	Description
FB 160		Round panel air filters
FBK 160-4	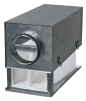	Round bag air filters
FBK 160-5		Round bag air filters

FBK 160-7		Round bag air filters

For round ducts

Name	Photo	Description
KOM 160		Backdraught damper with spring-loaded plates for shutting off air flow in round air ducts
KR 160		Air dampers for controlling air flow in round air ducts

Water heaters

Name	Photo	Description
NKV 160-2		Inline water supply air heaters or heater for air handling units with a round cross-section
NKV 160-4		Inline water supply air heaters or heater for air handling units with a round cross-section

Electrical heaters

Name	Photo	Description
NK 160-1,2-1		Round electric inline heaters with round cross-section
NK 160-1,7-1		Round electric inline heaters with round cross-section
NK 160-2,0-1		Round electric inline heaters with round cross-section
NK 160-2,4-1		Round electric inline heaters with round cross-section
NK 160-3,4-1		Round electric inline heaters with round cross-section

Speed controllers

Name	Photo	Description
RSA5E-3,5-T		Speed controllers are applied for air flow control of single phase fans by means of motor step speed control

RSA5E-5,0-T		Speed controllers are applied for air flow control of single phase fans by means of motor step speed control
RSA5E-7,5-T		Speed controllers are applied for air flow control of single phase fans by means of motor step speed control

Ecodesign

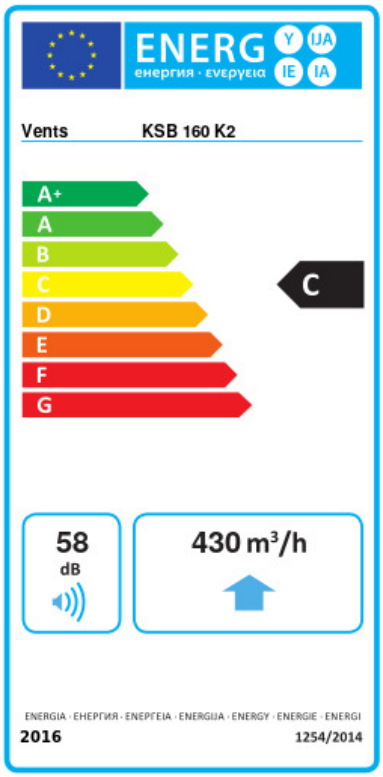

Trademark	Vents					
Model	KSB 160 K2					
Specific energy consumption (SEC) (kWh/(m²/a))	Cold		Average		Warm	
	-51.7	A+	-24.6	C	-9.1	F
Type of ventilation unit	Unidirectional					
Type of drive installed	Variable speed					
Type of heat recovery system	None					
Maximum flow rate (m³/h)	430					
Electric power input (W)	82					
Reference flow rate (m³/s)	0.084					
Reference pressure difference (Pa)	50					
Specific power input (SPI) (W/(m³/h))	0.278					
Control typology	Local demand control					
Maximum external leakage rates (%)	2.7					
Sound power level (dB(A))	58					
Declared typology	RVU UVU					
The annual electricity consumption (AEC) (kWh/a)	Cold		Average		Warm	
	147		147		147	
The annual heating saved (AHS) (kWh/a)	Cold		Average		Warm	
	5536		2830		1280	