KSB 150



Centrifugal inline fans with backward curved blades in sound-insulated casing

- Sound pressure level LpA at 3 m: 36
- Sound-insulated casing
- Impeller type: Centrifugal impeller with backward curved blades
- Casing material: Galvanized steel
- Installation in any position

	Unit of measurement	KSB 150
Connected air duct size	mm	150
Phases	-	1
Minimum supply voltage	V	220
Maximum supply voltage	V	240
Power supply frequency	Hz	50/60
Rated power	W	72
Unit current	A	0.32
Maximum airflow	m^3/h	420
Rotation speed at 50hz	-	2600
Sound pressure level LpA at 3 m	dB(A)	36
Weight	kg	6.4
Transported air temperature (max)	°C	55
Transported air temperature (min)	°C	-25
Ingress protection rating	-	IPX4
Impeller material	-	Plastic

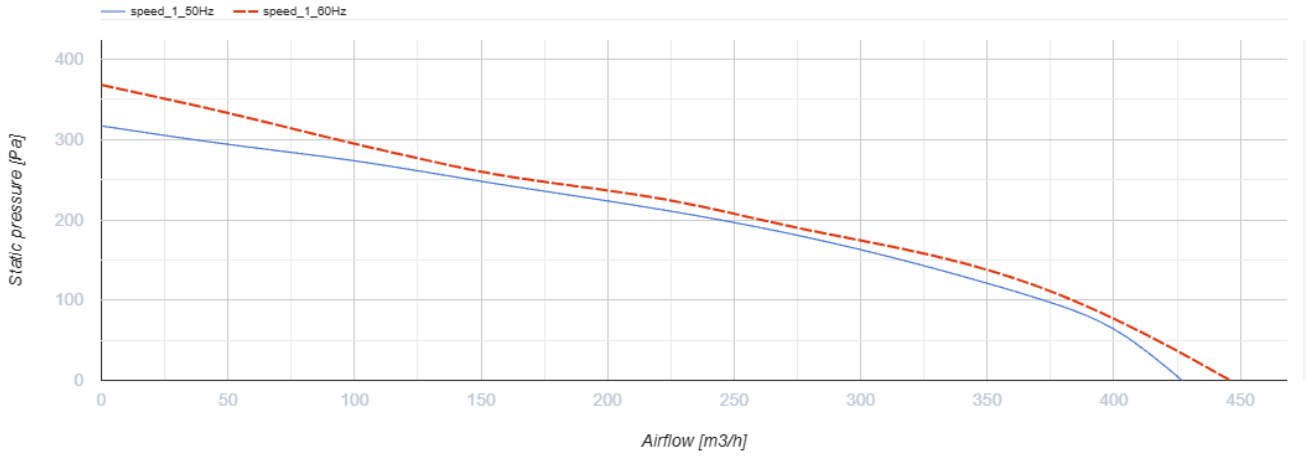

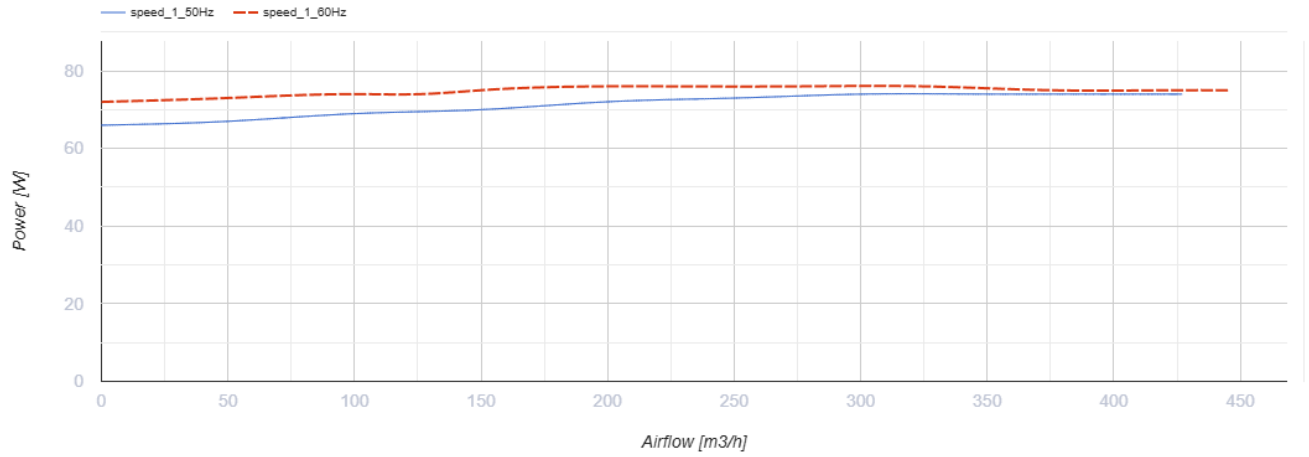

Dimensions

ØD	B	B1	H	L	L1	L2
149	352	310	212	477	410	380

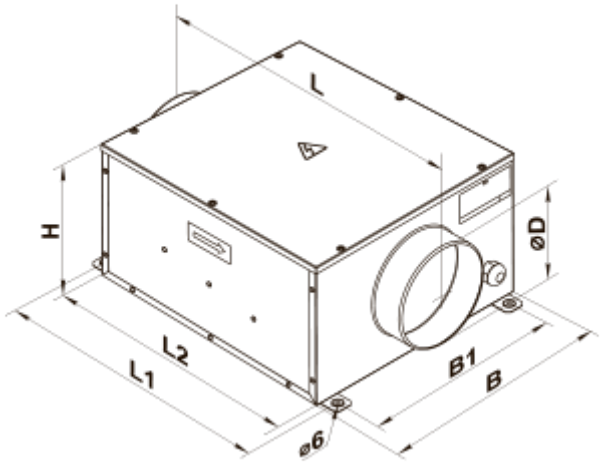

Ecodesign

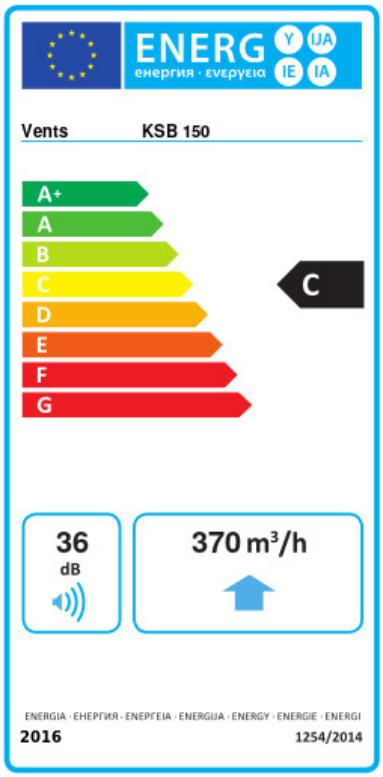

Trademark	Vents					
Model	KSB 150					
Specific energy consumption (SEC) (kWh/(m²/a))	Cold		Average		Warm	
	-52.5	A+	-25.4	C	-9.9	F
Type of ventilation unit	Unidirectional					
Type of drive installed	Multi-speed					
Type of heat recovery system	None					
Maximum flow rate (m³/h)	370					
Electric power input (W)	72					
Reference flow rate (m³/s)	0.072					
Reference pressure difference (Pa)	50					
Specific power input (SPI) (W/(m³/h))	0.153					
Control typology	Local demand control					
Maximum external leakage rates (%)	2.7					
Declared typology	RVU UVU					
Sound power level (dB(A))	36					
The annual electricity consumption (AEC) (kWh/a)	Cold		Average		Warm	
	114		114		114	
The annual heating saved (AHS) (kWh/a)	Cold		Average		Warm	
	5536		2830		1280	