KSB 125 K2 S

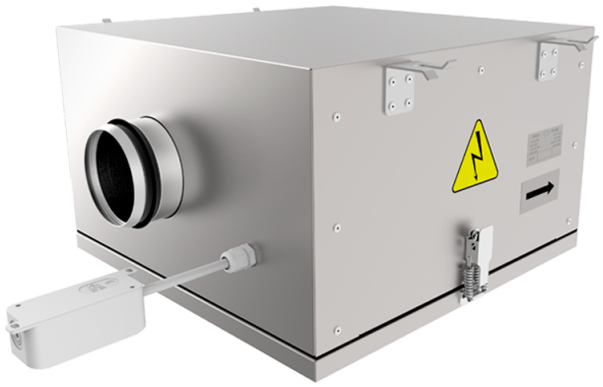

Centrifugal inline fans with backward curved blades in case with improved sound insulation properties

- Sound pressure level LpA at 3 m: 40
- Sound-insulated casing
- Impeller type: Centrifugal impeller with backward curved blades
- Casing material: Galvanized steel
- Installation in any position

	Unit of measurement	KSB 125 K2 S
Connected air duct size	mm	125
Phases	-	1
Minimum supply voltage	V	230
Maximum supply voltage	V	230
Power supply frequency	Hz	50
Rated power	W	88
Unit current	A	0.37
Maximum airflow	m^3/h	484
Rotation speed at 50hz	-	2670
Sound pressure level LpA at 3 m	dB(A)	40
Weight	kg	19
Transported air temperature (max)	°C	55
Transported air temperature (min)	°C	-25
Ingress protection rating	-	IPX4
Ingress protection rating of the drive	-	IP44
Impeller material	-	Plastic

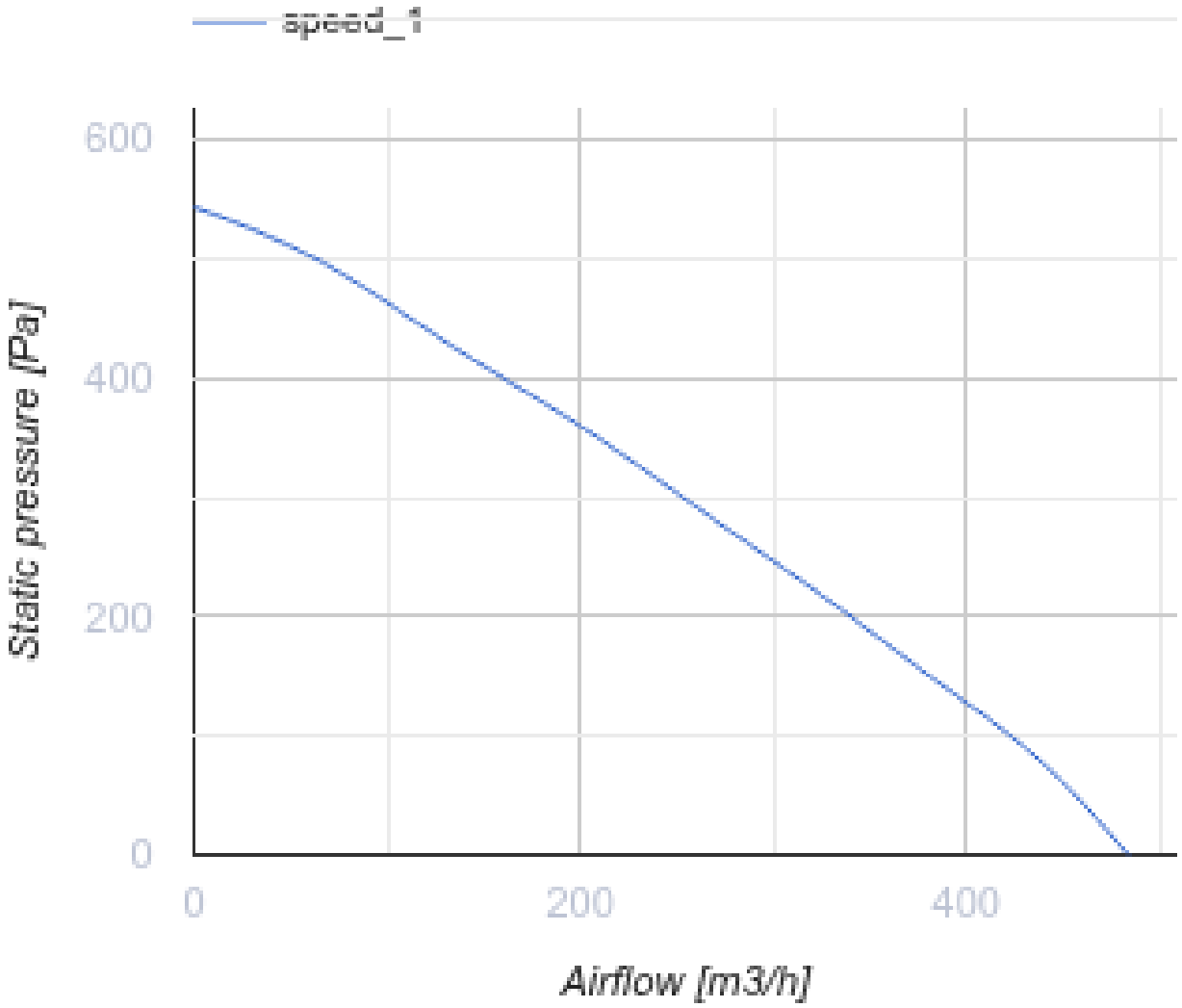
speed_1
600
400
200
0
0
200
400
Static pressure [Pa]
Airflow [m3/h]

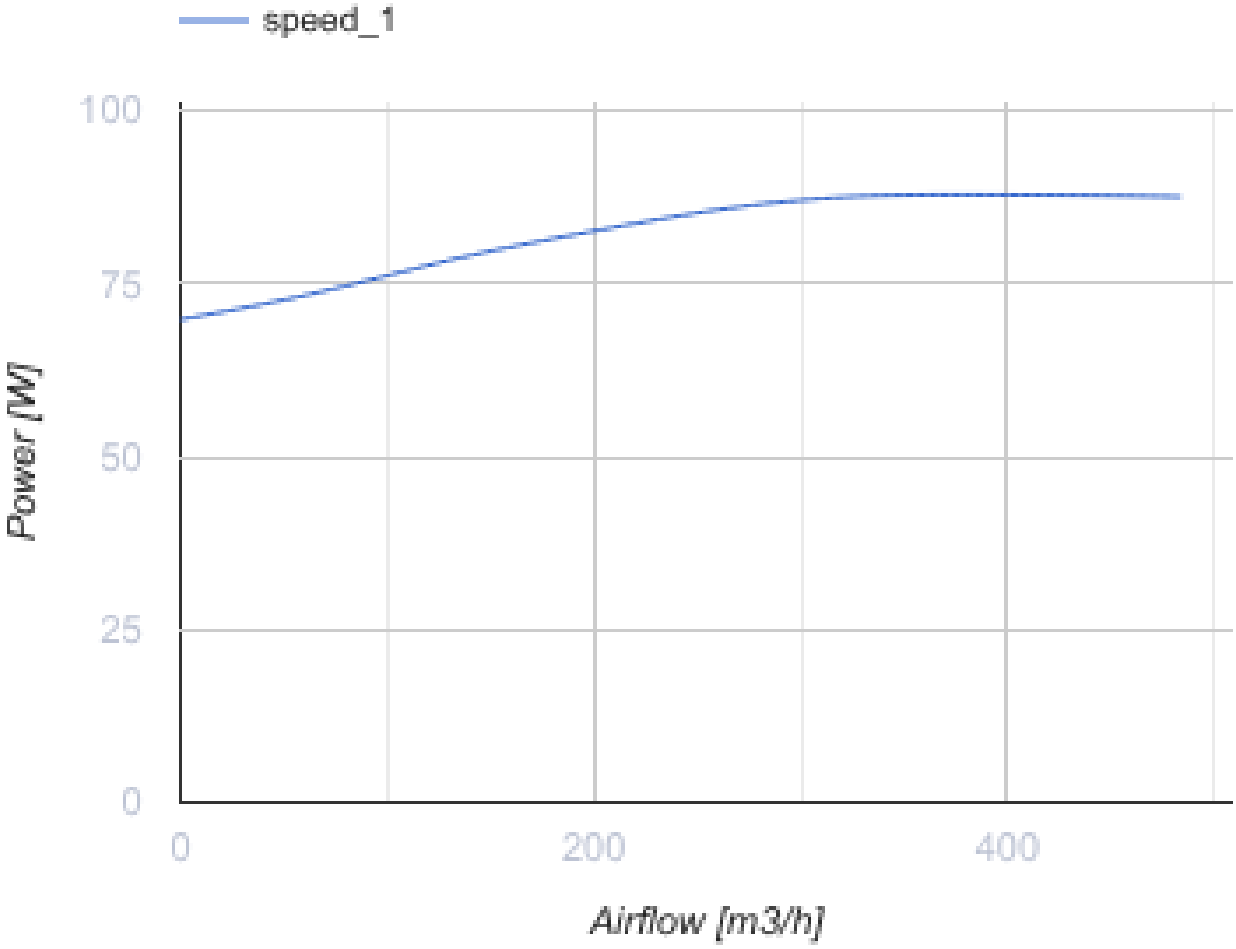

Dimensions

ØD	B	B1	H	L	L1	L2
124	533	333	280	630	617	525

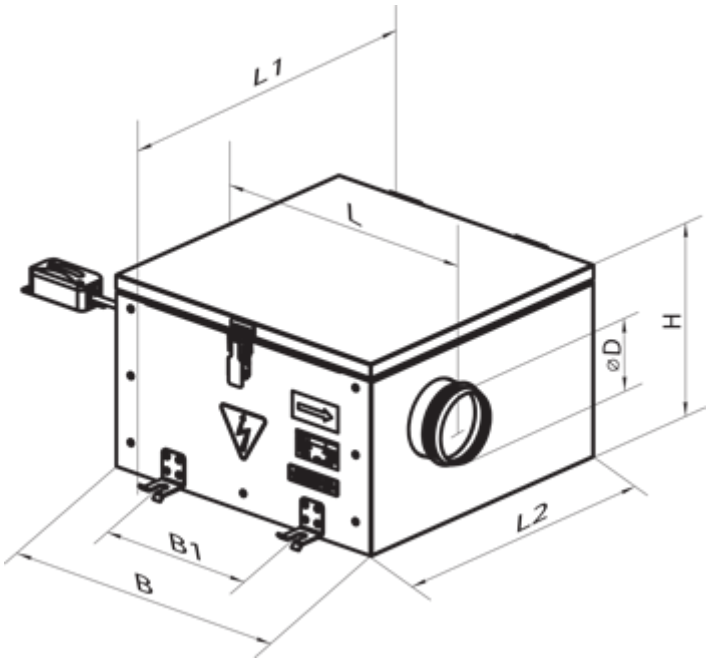

Accessories

For round ducts

Name	Photo	Description
SR 125/600		Silencers made of galvanized steel filled with non-combustible sound-absorbing material
SR 125/900		Silencers made of galvanized steel filled with non-combustible sound-absorbing material
SR 125/1200		Silencers made of galvanized steel filled with non-combustible sound-absorbing material

For round ducts

Name	Photo	Description
FB 125		Round panel air filters
FBK 125-4	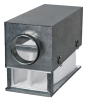	Round bag air filters
FBK 125-5		Round bag air filters

FBK 125-7		Round bag air filters

For round ducts

Name	Photo	Description
KOM 125		Backdraught damper with spring-loaded plates for shutting off air flow in round air ducts
KR 125		Air dampers for controlling air flow in round air ducts

Water heaters

Name	Photo	Description
NKV 125-2		Inline water supply air heaters or heater for air handling units with a round cross-section
NKV 125-4		Inline water supply air heaters or heater for air handling units with a round cross-section

Electrical heaters

Name	Photo	Description
NK 125-0,6-1		Round electric inline heaters with round cross-section
NK 125-0,8-1		Round electric inline heaters with round cross-section
NK 125-1,2-1		Round electric inline heaters with round cross-section
NK 125-1,6-1		Round electric inline heaters with round cross-section
NK 125-2,4-1		Round electric inline heaters with round cross-section

Speed controllers

Name	Photo	Description
RSA5E-3,5-T		Speed controllers are applied for air flow control of single phase fans by means of motor step speed control

RSA5E-5,0-T		Speed controllers are applied for air flow control of single phase fans by means of motor step speed control
RSA5E-7,5-T		Speed controllers are applied for air flow control of single phase fans by means of motor step speed control

Ecodesign

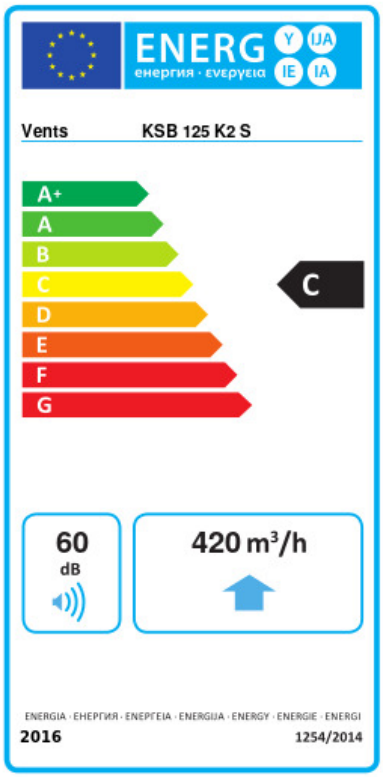

Trademark	Vents					
Model	KSB 125 K2 S					
Specific energy consumption (SEC) (kWh/(m²/a))	Cold		Average		Warm	
	-51.4	A+	-24.4	C	-8.9	F
Type of ventilation unit	Unidirectional					
Type of drive installed	Variable speed					
Type of heat recovery system	None					
Maximum flow rate (m³/h)	420					
Electric power input (W)	88					
Reference flow rate (m³/s)	0.082					
Reference pressure difference (Pa)	50					
Specific power input (SPI) (W/(m³/h))	0.296					
Control typology	Local demand control					
Maximum external leakage rates (%)	2.7					
Declared typology	RVU UVU					
Sound power level (dB(A))	60					
The annual electricity consumption (AEC) (kWh/a)	Cold		Average		Warm	
	157		157		157	
The annual heating saved (AHS) (kWh/a)	Cold		Average		Warm	
	5536		2830		1280	