KSB 100



Centrifugal inline fans with backward curved blades in sound-insulated casing

- Sound pressure level LpA at 3 m: 33
- Sound-insulated casing
- Impeller type: Centrifugal impeller with backward curved blades
- Casing material: Galvanized steel
- Installation in any position

	Unit of measurement	KSB 100
Connected air duct size	mm	100
Phases	-	1
Minimum supply voltage	V	220
Maximum supply voltage	V	240
Power supply frequency	Hz	50/60
Rated power	W	73
Unit current	A	0.32
Maximum airflow	m^3/h	240
Rotation speed at 50hz	-	2560
Sound pressure level LpA at 3 m	dB(A)	33
Weight	kg	5.4
Transported air temperature (max)	°C	55
Transported air temperature (min)	°C	-25
Ingress protection rating	-	IPX4
Impeller material	-	Plastic

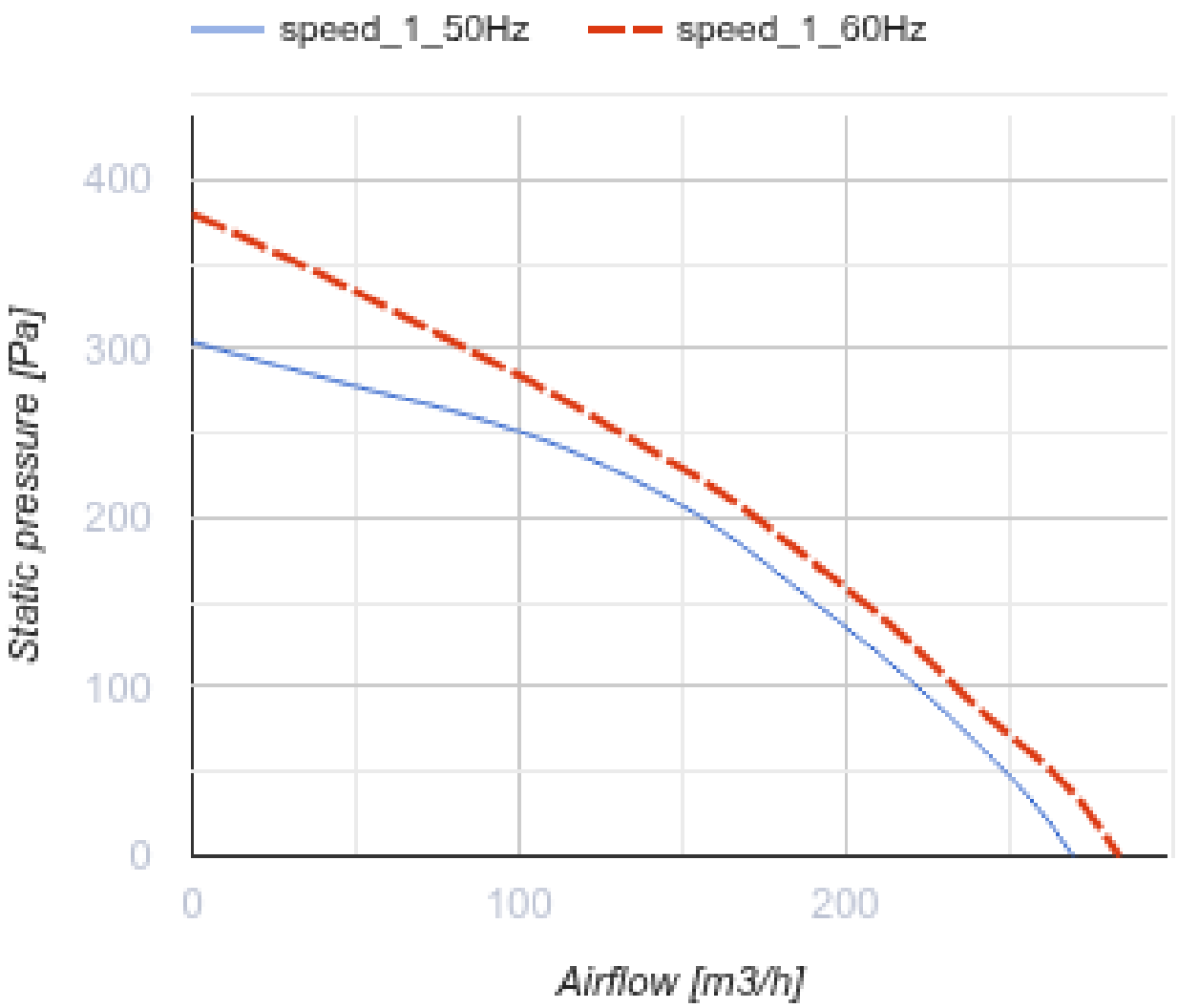
speed_1_50Hz
speed_1_60Hz
400
300
200
100
0
Static pressure [Pa]
0
100
200
Airflow [m3/h]

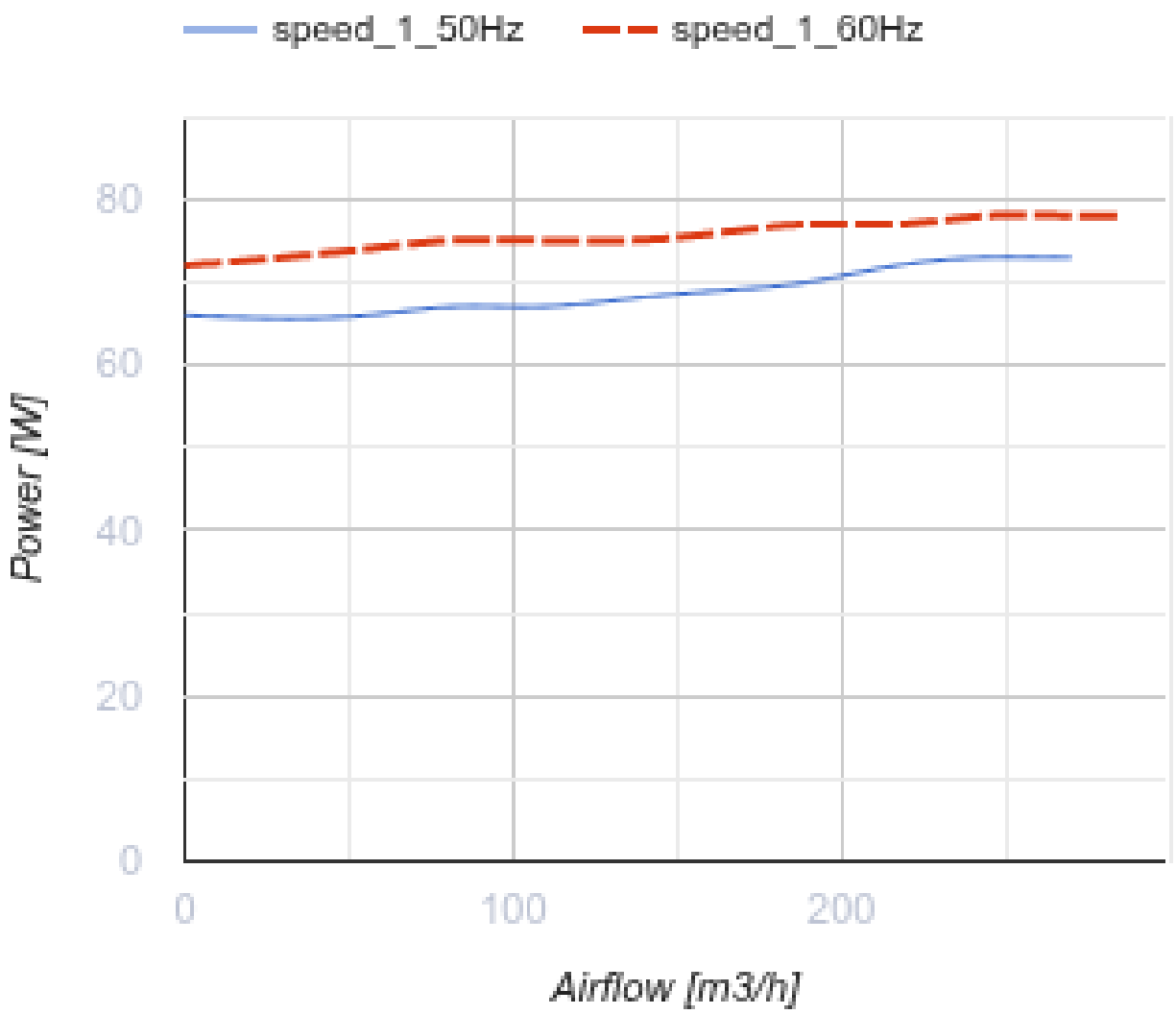

Dimensions

ØD	B	B1	H	L	L1	L2
99	322	280	192	447	380	350

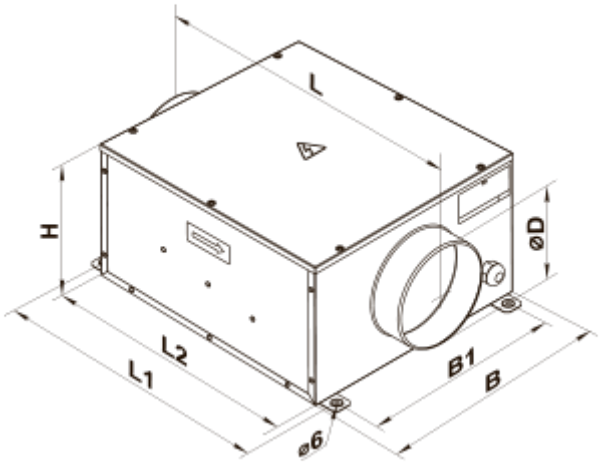
L
H
ØD
L2
L1
B1
B
ø6

Ecodesign

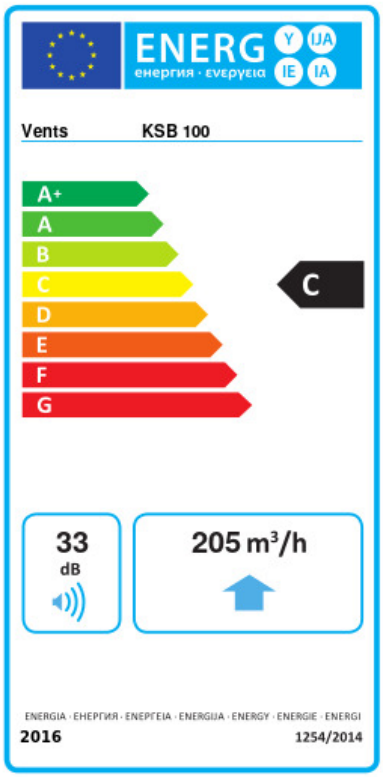

Trademark	Vents					
Model	KSB 100					
Specific energy consumption (SEC) (kWh/(m²/a))	Cold		Average		Warm	
	-50.1	A+	-23.1	C	-7.6	F
Type of ventilation unit	Unidirectional					
Type of drive installed	Multi-speed					
Type of heat recovery system	None					
Maximum flow rate (m³/h)	205					
Electric power input (W)	73					
Reference flow rate (m³/s)	0.04					
Reference pressure difference (Pa)	50					
Specific power input (SPI) (W/(m³/h))	0.28					
Control typology	Local demand control					
Maximum external leakage rates (%)	2.7					
Sound power level (dB(A))	33					
Declared typology	RVU UVU					
The annual electricity consumption (AEC) (kWh/a)	Cold		Average		Warm	
	209		209		209	
The annual heating saved (AHS) (kWh/a)	Cold		Average		Warm	
	5536		2830		1280	