KSB 100 K2 EC R1

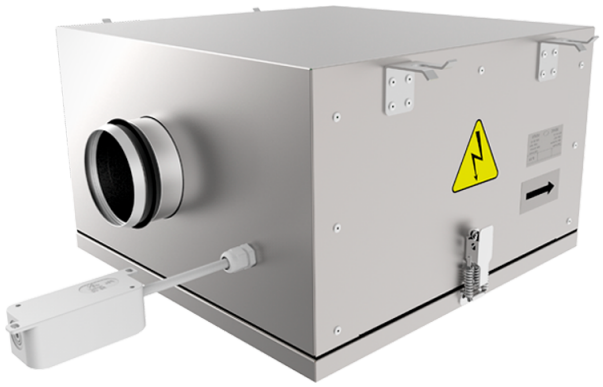

Centrifugal inline fans with backward curved blades in cases with improved sound insulation properties with EC-motors

- Sound pressure level LpA at 3 m: 37
- Sound-insulated casing
- Impeller type: Centrifugal impeller with backward curved blades
- Casing material: Aluzinc
- Installation in any position
- Cable with mains plug

	Unit of measurement	KSB 100 K2 EC R1
Phases	-	1
Minimum supply voltage	V	230
Maximum supply voltage	V	230
Power supply frequency	Hz	50/60
Rated power	W	69
Unit current	A	0.55
Maximum airflow	m³/h	341
Rotation speed at 50hz	-	3270
Sound pressure level LpA at 3 m	dB(A)	37
Weight	kg	12
Transported air temperature (max)	°C	55
Transported air temperature (min)	°C	-25
Ingress protection rating	-	IPX4
Ingress protection rating of the drive	-	IP55
Impeller material	-	Plastic

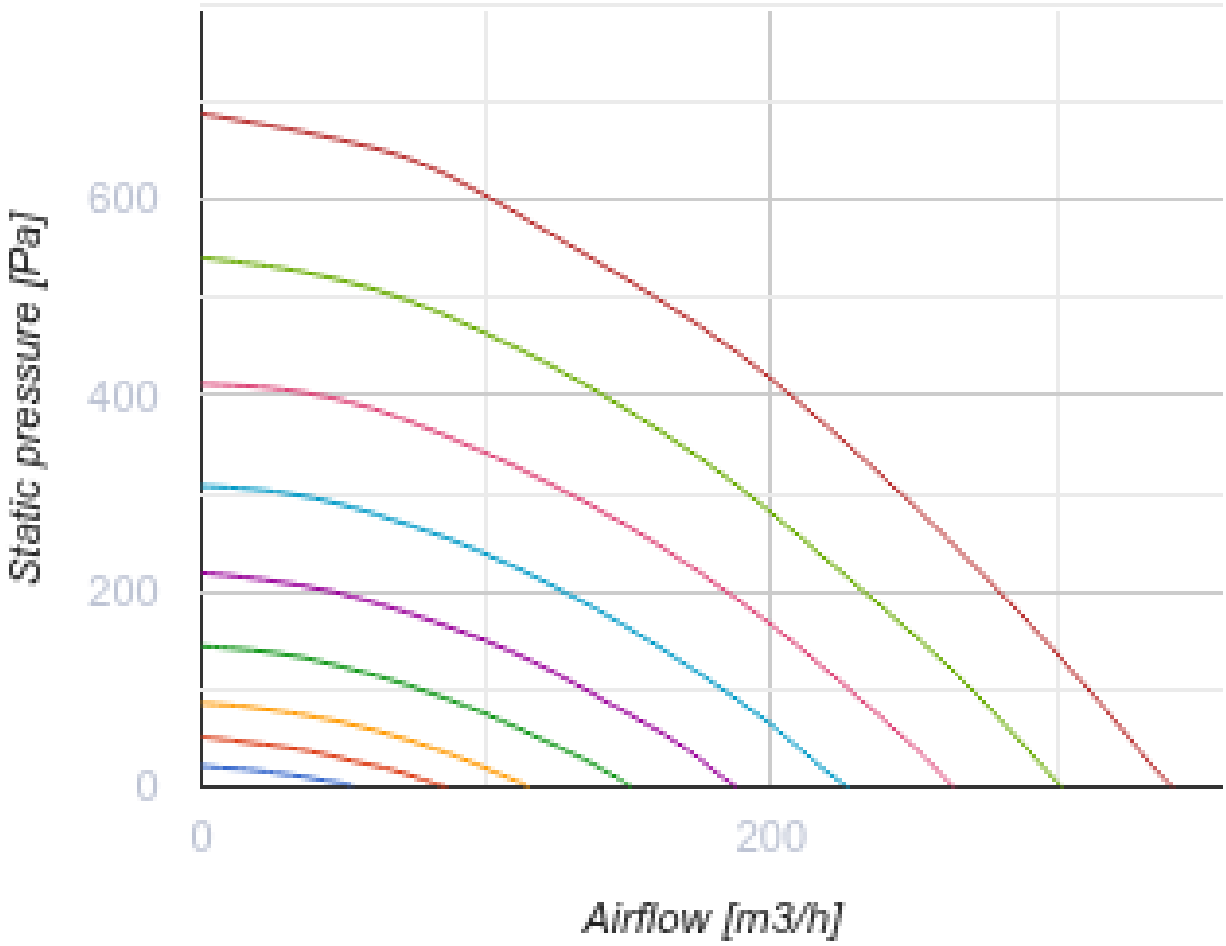
Static pressure [Pa]
600
400
200
0
0
200
Airflow [m3/h]

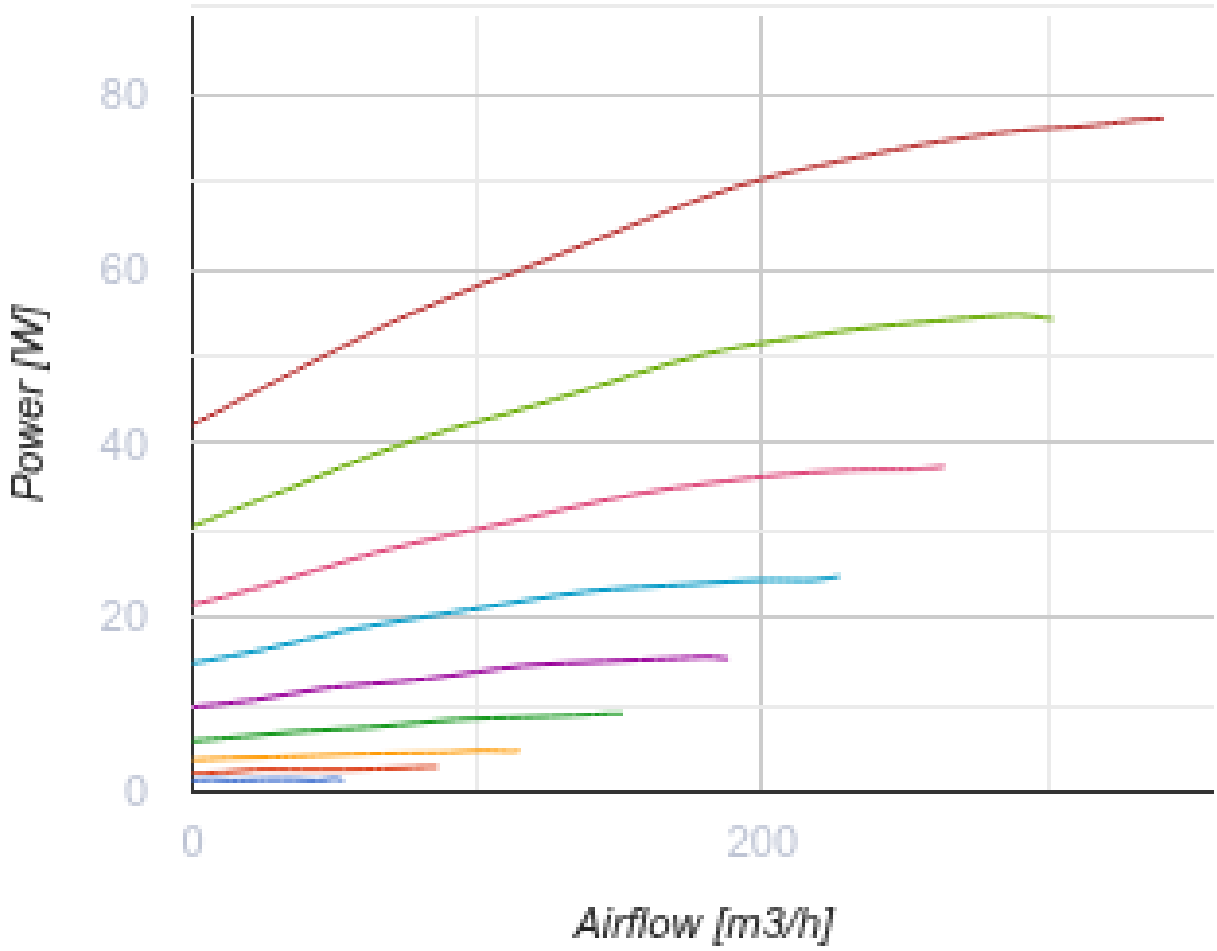

Dimensions

ØD	B	B1	B2	H	L1	L2
99	420	228	517	270	507	414

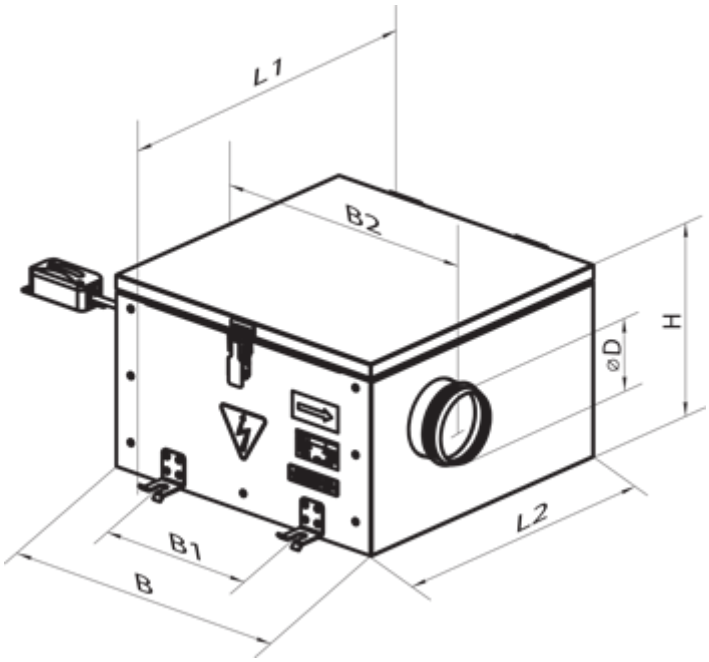

Accessories

For round ducts

Name	Photo	Description
SR 100/600		Silencers made of galvanized steel filled with non-combustible sound-absorbing material
SR 100/900		Silencers made of galvanized steel filled with non-combustible sound-absorbing material
SR 100/1200		Silencers made of galvanized steel filled with non-combustible sound-absorbing material

For round ducts

Name	Photo	Description
FB 100		Round panel air filters
FBK 100-4	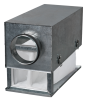	Round bag air filters
FBK 100-5		Round bag air filters

FBK 100-7		Round bag air filters

For round ducts

Name	Photo	Description
KOM 100		Backdraught damper with spring-loaded plates for shutting off air flow in round air ducts
KR 100		Air dampers for controlling air flow in round air ducts

Water heaters

Name	Photo	Description
NKV 100-2		Inline water supply air heaters or heater for air handling units with a round cross-section
NKV 100-4		Inline water supply air heaters or heater for air handling units with a round cross-section

Electrical heaters

Name	Photo	Description
NK 100-0,6-1		Round electric inline heaters with round cross-section
NK 100-0,8-1		Round electric inline heaters with round cross-section
NK 100-1,2-1		Round electric inline heaters with round cross-section
NK 100-1,6-1		Round electric inline heaters with round cross-section
NK 100-1,8-1		Round electric inline heaters with round cross-section

Speed controllers

Name	Photo	Description

R-1/010		Speed controller for EC motors