KSA 200-4E



Centrifugal inline fans with forward curved blades

- Sound pressure level LpA at 3 m: 29.1
- Sound-insulated casing
- Impeller type: Centrifugal impeller with forward curved blades
- Casing material: Galvanized steel
- Installation in any position

	Unit of measurement	KSA 200-4E
Connected air duct size	mm	200
Phases	-	1
Minimum supply voltage	V	230
Maximum supply voltage	V	230
Power supply frequency	Hz	50
Rated power	W	115
Unit current	A	0.5
Maximum airflow	m^3/h	640
Rotation speed at 50hz	-	1350
Sound pressure level LpA at 3 m	dB(A)	29.1
Weight	kg	8.25
Transported air temperature (max)	°C	40
Transported air temperature (min)	°C	-25
Ingress protection rating	-	IPX2
Ingress protection rating of the drive	-	IP44
Impeller material	-	Galvanized steel

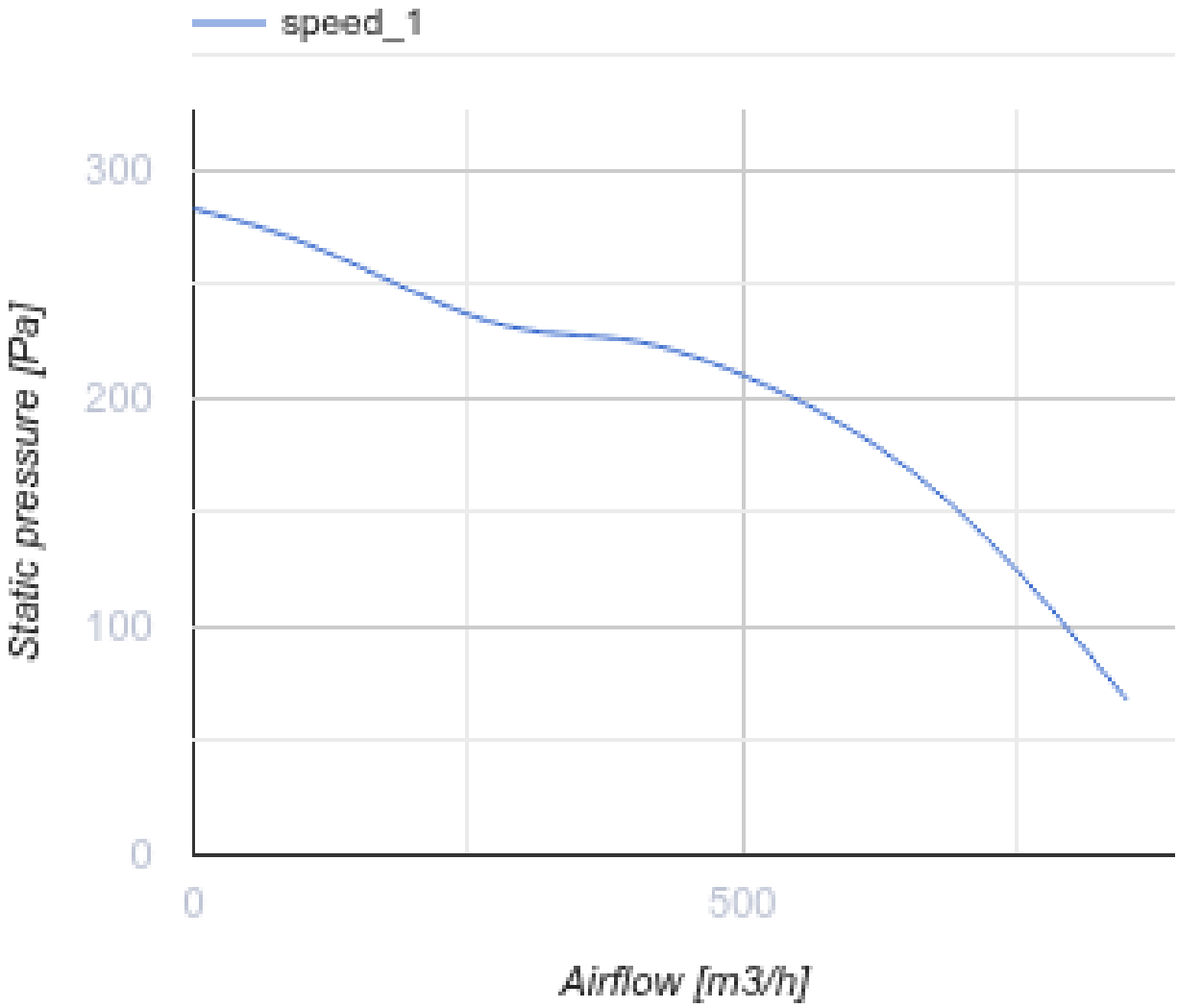
speed_1
300
200
100
0
0
500
Static pressure [Pa]
Airflow [m3/h]

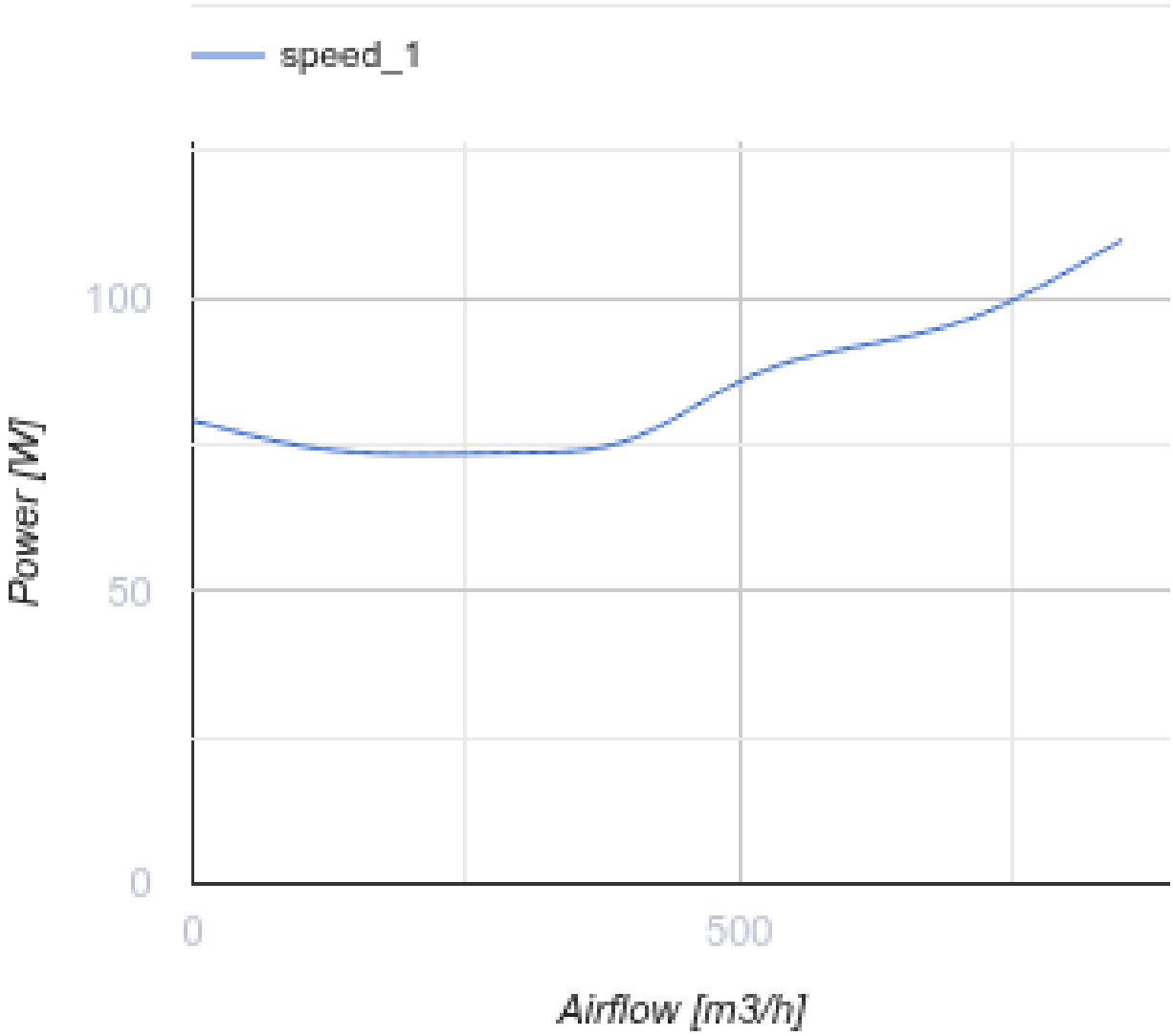

Dimensions

ØD	B	H	L	P
198	282	408	445	48

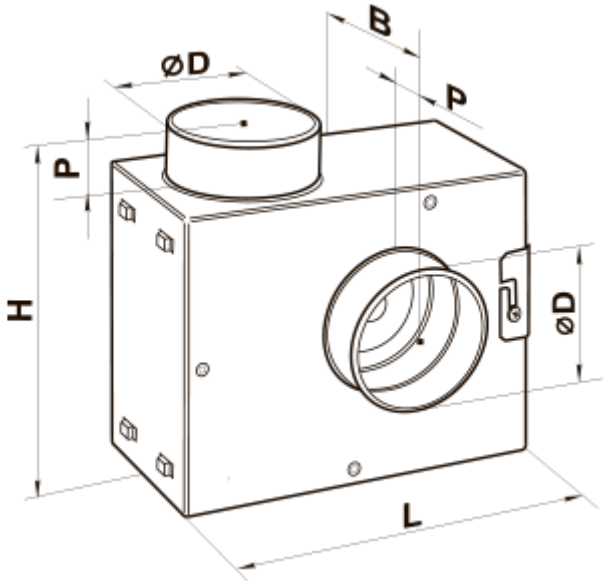
B
ØD
P
P
H
ØD
L