KRV 80

Air dampers for automatic air flow control in round ducts

• Casing material: Galvanized steel



	Unit of measurement	KRV 80
Connected air duct size	mm	80
Weight	kg	0.6

Dimensions

D	B	L	H
79	190	200	170

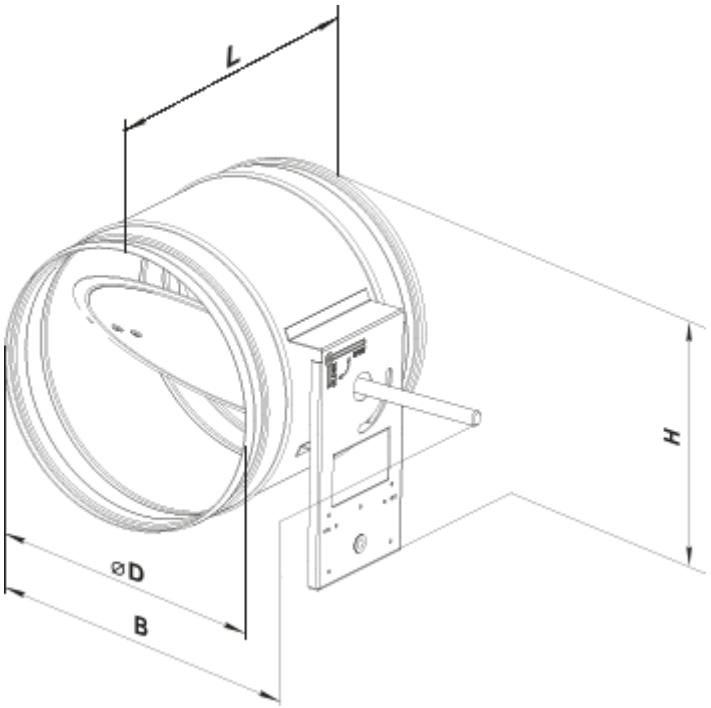
L
H
ØD
B