KRV 500

Air dampers for automatic air flow control in round ducts

• Casing material: Galvanized steel



	Unit of measurement	KRV 500
Connected air duct size	mm	500
Weight	kg	5.55

Dimensions

D	B	L	H
499	620	240	–

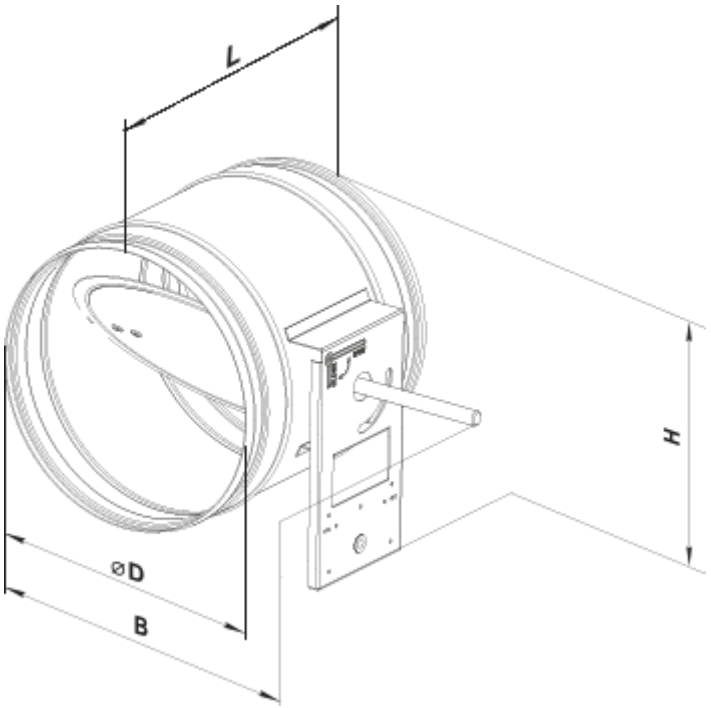
L
H
ØD
B