KR 630

Air dampers for controlling air flow in round air ducts

• Casing material: Galvanized steel



	Unit of measurement	KR 630
Connected air duct size	mm	630
Weight	kg	7.76

Dimensions

D	B	L
629	700	240

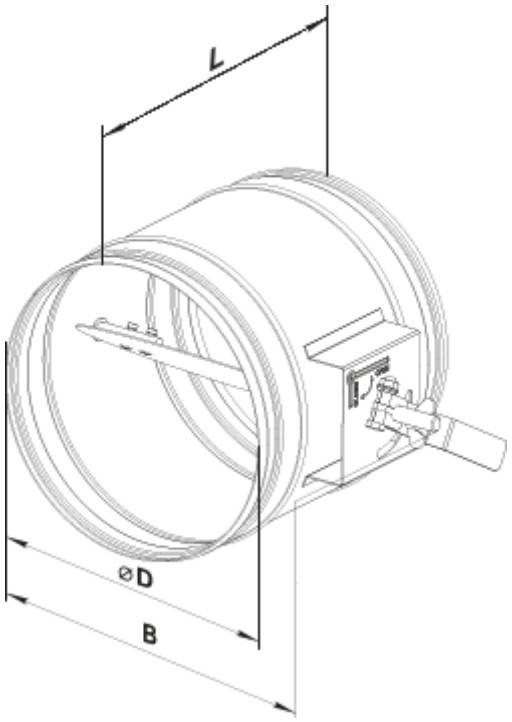
L
⌀D
B