KOM1 600x350

Backdraught gravity dampe for shutting off air flow in rectangular air ducts

- Casing material: Galvanized steel

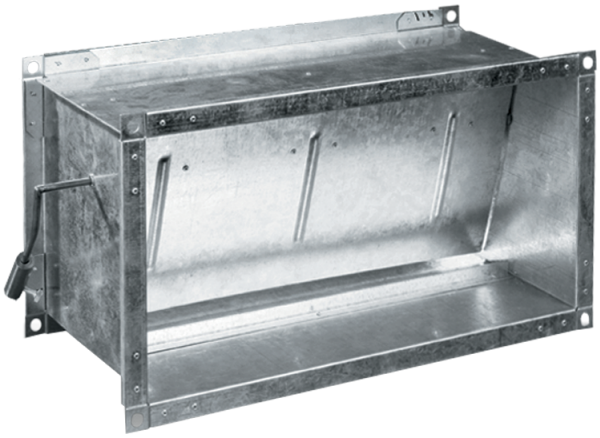

	Unit of measurement	KOM1 600x350
Weight	kg	5.03

Dimensions

B	B1	B2	B3	H	H1	H2	L
600	620	640	661	350	370	390	202

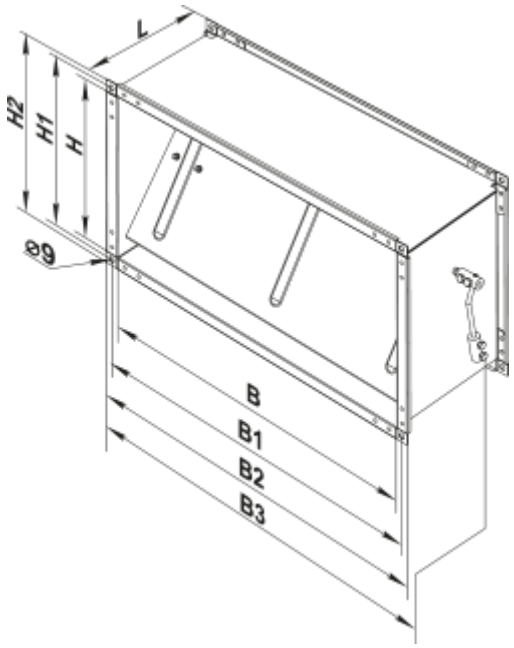
L
H2
H1
H
ø9
B
B1
B2
B3