# KG 900x500

Gravity valve for automatic airflow shut-off in round air ducts

- Casing material: Galvanized steel

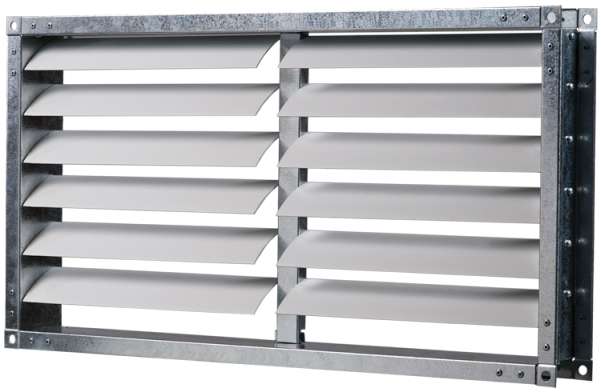

| | Unit of measurement | KG 900x500 |
|---|---|---|
| Weight | kg | 3.8 |

## Dimensions

| B | B1 | B2 | H | H1 | H2 |
|---|---|---|---|---|---|
| 900 | 920 | 940 | 500 | 520 | 540 |

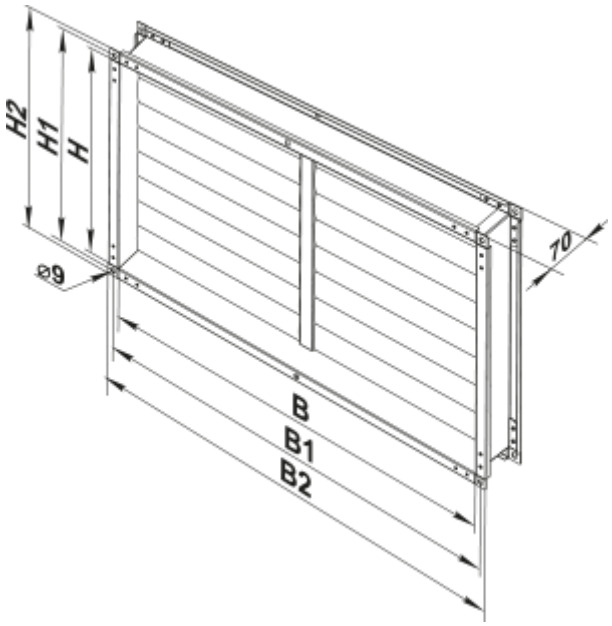
H2
H1
H
ø9
70
B
B1
B2