# KAM 150 (KFK)



Chimney fans

- Sound pressure level LpA at 3 m: 42
- Casing material: Galvanized steel

| | Unit of measurement | KAM 150 (KFK) |
|---|---|---|
| Phases | - | 1 |
| Minimum supply voltage | V | 230 |
| Maximum supply voltage | V | 230 |
| Power supply frequency | Hz | 50 |
| Rated power | W | 115 |
| Unit current | A | 0.84 |
| Maximum airflow | m³/h | 520 |
| Sound pressure level LpA at 3 m | dB(A) | 42 |
| Weight | kg | 9.7 |
| Transported air temperature (max) | °C | 150 |
| Ingress protection rating | - | IPX2 |
| Size | mm | 150 |

## Dimensions

| ØD | B | H | H1 | L | P |
|---|---|---|---|---|---|
| 149 | 285 | 650 | 600 | 300 | 50 |

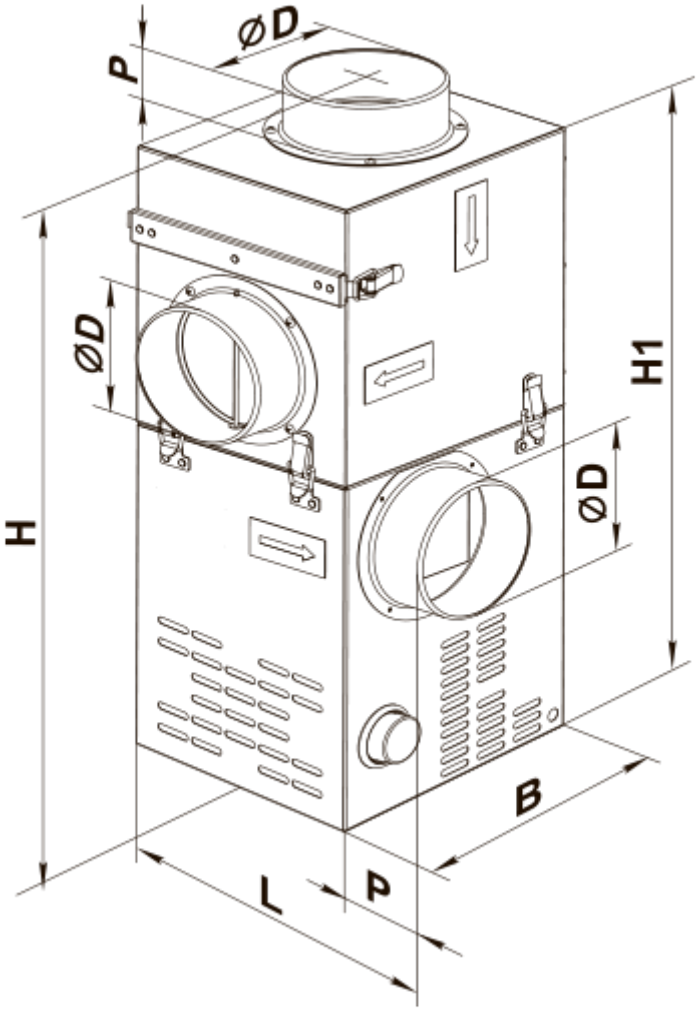


## Accessories

### Thyristor speed controllers

| Name | Photo | Description |
|---|---|---|
| RS-1-300 |  | Speed controller |
| RS-1-400 |  | Speed controller |
| RS-1 N |  | Speed controller |
| RS-1 V |  | Speed controller |
| RS-1,5 N |  | Speed controller |

| | | |
|---|---|---|
| RS-1,5 V |  | Speed controller |
| RS-2 N |  | Speed controller |
| RS-2 V |  | Speed controller |
| RS-2,5 N |  | Speed controller |
| RS-2,5 V |  | Speed controller |
| RS-3,0-T |  | Applied in ventilation systems for speed switching ON/OFF and speed control of single-phase power-controlled motors |
| RS-5,0-T |  | Applied in ventilation systems for speed switching ON/OFF and speed control of single-phase power-controlled motors |
| RS-3,0-TA |  | Applied in ventilation systems for switching ON/OFF and speed controlling of single-phase power-controlled motors |
| RS-5,0-TA |  | Applied in ventilation systems for switching ON/OFF and speed controlling of single-phase power-controlled motors |

## Speed controllers

| Name | Photo | Description |
|---|---|---|
| RS-1,5-PS |  | Used in ventilation systems for switching on/off and speed control of single-phase fan motors with voltage control |
| RS-2,5-PS |  | Used in ventilation systems for switching on/off and speed control of single-phase fan motors with voltage control |
| RS-4,0-PS |  | Used in ventilation systems for switching on/off and speed control of single-phase fan motors with voltage control |
| RSA5E-3,5-T |  | Speed controllers are applied for air flow control of single phase fans by means of motor step speed control |
| RSA5E-5,0-T |  | Speed controllers are applied for air flow control of single phase fans by means of motor step speed control |

### Transformer speed controllers

| Name | Photo | Description |
|---|---|---|
| RSA5E-2-P |  | Speed control enables selection of the ventilation mode for periodically occupied premises. |
| RSA5E-2-M |  | Speed controls enable selection of the ventilation mode for periodically occupied premises |
| RSA5E-3-M |  | Speed controls enable selection of the ventilation mode for periodically occupied premises |
| RSA5E-4-M |  | Speed controls enable selection of the ventilation mode for periodically occupied premises |

## Sensors

| Name | Photo | Description |
|---|---|---|
| TH-1,5 N |  | Humidity / light / motion sensors, timers |
| T-1,5 N |  | Humidity / light / motion sensors, timers |
| TF-1,5 N |  | Humidity / light / motion sensors, timers |
| TP-1,5 N |  | Humidity / light / motion sensors, timers |

## Temperature regulators

| Name | Photo | Description |
|---|---|---|
| RT-10 |  | Temperature regulator |

## Temperature controllers

| Name | Photo | Description |
|---|---|---|
| TS-1-90 |  | External temperature controller for chimney fans |

## Fittings

| Name | Photo | Description |
|---|---|---|

| | | |
|---|---|---|
| C 150 |  | The clamps are designed for quick and reliable mounting and connection of various round ventilation system components. Clamps are made of stainless steel band |
| CB 60-165 |  | The clamps are designed for quick and reliable mounting and connection of various round ventilation system components. Clamps are the stainless steel quick-release clamps equipped with a stainless steel swing screw |