iFan Wi-Fi



Intelligent axial fans for extract ventilation with built-in Wi-Fi modules

- Sound pressure level LpA at 3 m: 32
- Control: Smartphone
- Impeller type: Axial
- Short spigot
- Humidity sensor
- Timer: Internal timer, Turn on timer, Turn off timer
- Ball bearing

	Unit of measurement	iFan Wi-Fi					
Speed	-	1	2	3	1	2	3
Connected air duct size	mm	100			125		
Minimum supply voltage	V	100					
Maximum supply voltage	V	240					
Power supply frequency	Hz	50/60					
Rated power	W	1.6	2.9	5.6	1.7	3	6
Unit current	A	0.02	0.04	0.06	0.03	0.04	0.07
Maximum airflow	m³/h	33	72	106	40	83	133
Sound pressure level LpA at 3 m	dB(A)	17	21	31	17	22	32
Weight	kg	0.63					
Ambient air temperature min	°C	1					
Ambient air temperature max	°C	40					
Ingress protection rating	-	IP44					

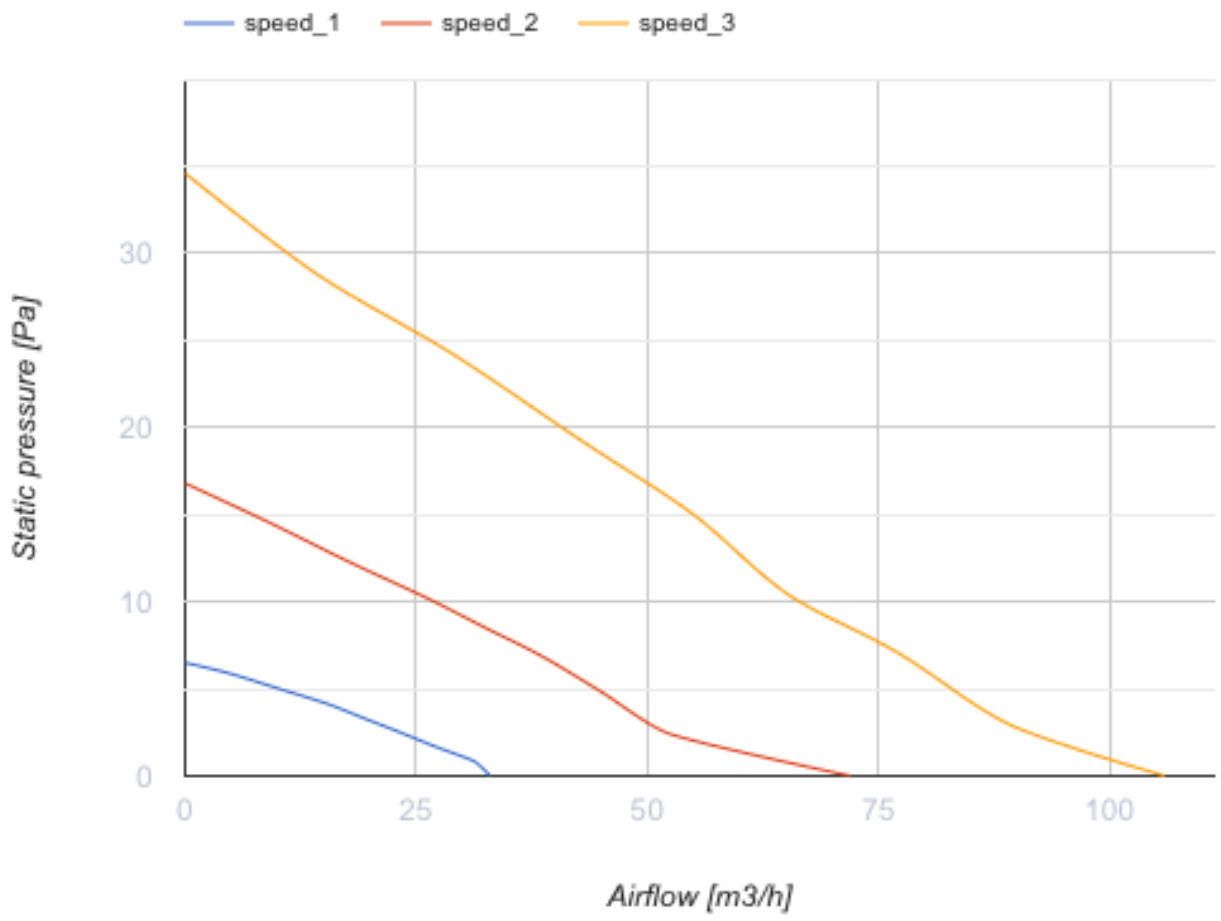
speed_1
speed_2
speed_3
Static pressure [Pa]
30
20
10
0
0
25
50
75
100
Airflow [m3/h]

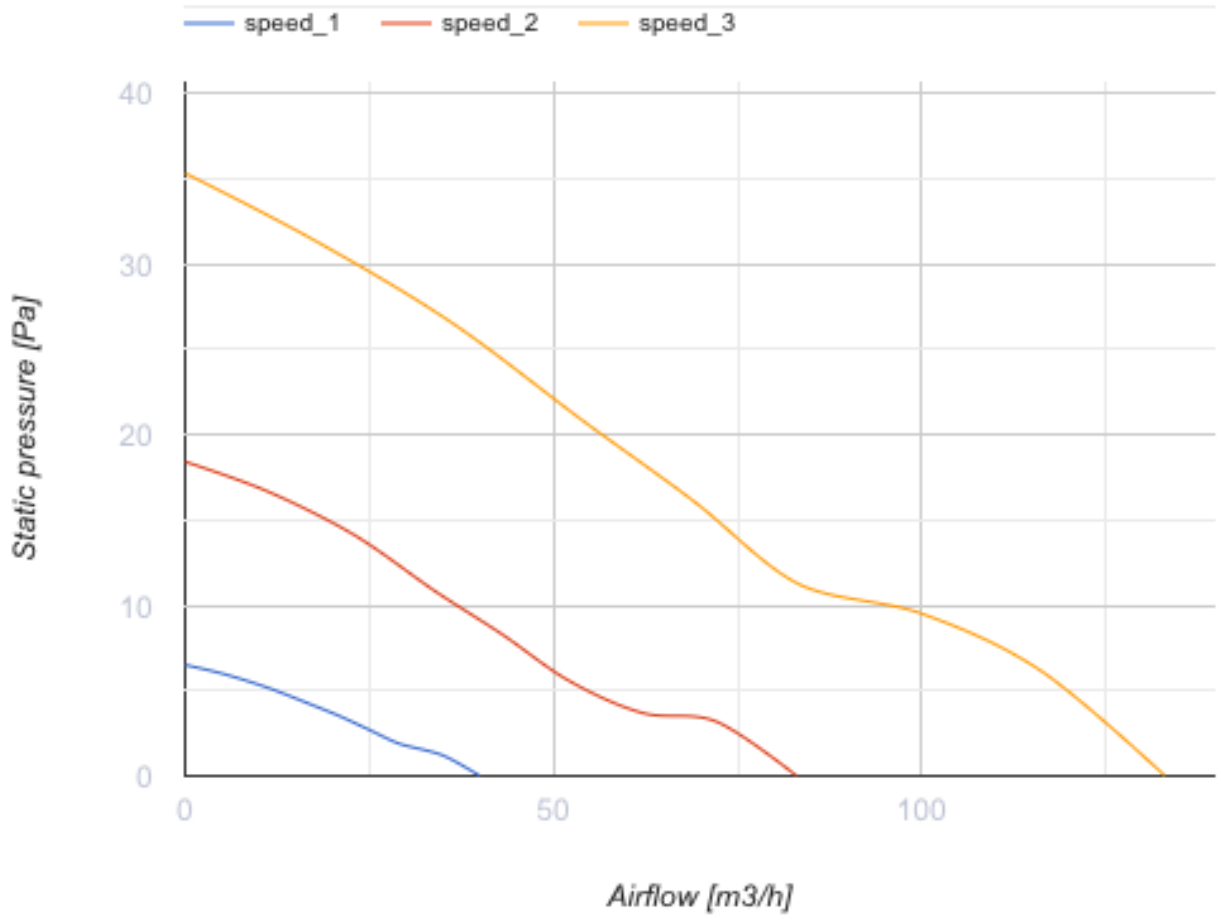

Dimensions

Ø D	B	H	L	L1
100/125	152	206	57	29

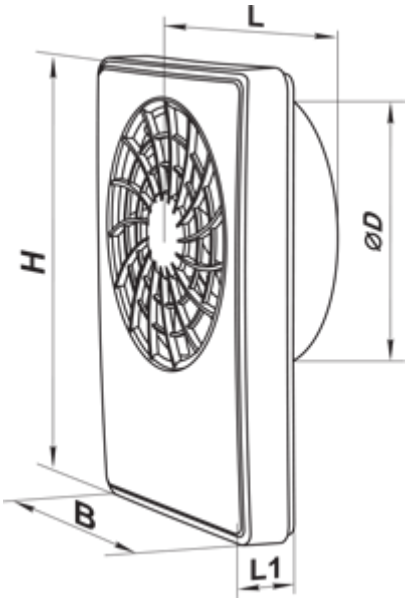

Accessories

Plastic

Name	Photo	Description
MV 100 V		Two-piece plastic grilles with angled louvers
MV 120 V		Two-piece plastic grilles with angled louvers

Fittings

Name	Photo	Description
PVT 050/10		The adhesive PVC tape is an insulation tape made of plasticized PVC base covered with a glue layer
PVT 050/30		The adhesive PVC tape is an insulation tape made of plasticized PVC base covered with a glue layer
PVT 050/50		The adhesive PVC tape is an insulation tape made of plasticized PVC base covered with a glue layer
C 100		The clamps are designed for quick and reliable mounting and connection of various round ventilation system components. Clamps are made of stainless steel band
C 125		The clamps are designed for quick and reliable mounting and connection of various round ventilation system components. Clamps are made of stainless steel band

Flat duct

Name	Photo	Description
1805		Wall mounting
2805		Wall mounting

Flexible ducts

Name	Photo	Description
Polyvent N		Flexible uninsulated air duct made of metallized film

Backdraft dampers

Name	Photo	Description
KO 100		Back valve is designed for domestic fan
KO 125		Back valve is designed for domestic fan
KO1 100		Back valve is designed for domestic fan

Window vents

Name	Photo	Description
PO 400		Window ventilators for supply ventilation

Plastic

Name	Photo	Description
MV 102 VK		Supply and exhaust hoods

Metal

Name	Photo	Description
MVM 102 V N		Exhaust metal hoods

Ecodesign

Trademark	Vents					
Model	iFan Wi-Fi					
Specific energy consumption (SEC) (kWh/(m²/a))	Cold		Average		Warm	
	-54.9	A+	-27.8	B	-12.3	E
Type of ventilation unit	Unidirectional					
Type of drive installed	Variable speed					
Type of heat recovery system	None					
Maximum flow rate (m³/h)	133					
Electric power input (W)	6					
Reference flow rate (m³/s)	0.023					
Specific power input (SPI) (W/(m³/h))	0.036					
Control typology	Local demand control					
Maximum external leakage rates (%)	2.7					
Declared typology	RVU UVU					
Sound power level (dB(A))	42					
The annual electricity consumption (AEC) (kWh/a)	Cold		Average		Warm	
	19		19		19	
The annual heating saved (AHS) (kWh/a)	Cold		Average		Warm	
	5536		2830		1280	